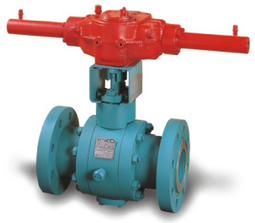

ZV

BALL VALVES

公 司·簡 介

公司名稱：億承企業股份有限公司

統一編號：22377893

創立日期：76年01月13日

工廠地址：429-台中縣神岡鄉神圳路71之3號

工廠電話：04-25610773

工廠傳真：04-25610772

E-mail：zvvalves@ms43.hinet.net

董事長：籃樹旺

聯絡人：籃樹旺

認証：

1.ISO 9001： 31 May，1999通過。

2.API 6D ： 11 April，2000通過。

ZV

億承企業股份有限公司
近年承接有關之實績營業內容

工 程 名 稱 及 內 容	工程金額（NT$）
台灣神隆(股)公司(製藥系統閥門)	1000萬
台塑集團(生產線上用閥)	1500萬
中鋼球塞閥系統	700萬
力麗化纖廠閥類系統	900萬
台糖公司精糖廠球塞閥系統	400萬
台電明潭發電廠閥類控制系統	900萬
美國 PBV OEM 廠	5000萬（年）
台灣氯乙稀球塞閥系統	100萬
大連化工球塞閥系統	900萬
ICI整廠球塞閥系統	750萬
台塑六輕（16”.18”.20”）球塞閥	700萬
華邦電子球塞閥系統	50萬
台塑集團無塵級球塞閥一批（白手套等級）（METAL TO METAL）	300萬
鐵砧山儲氣窖注產氣球塞閥系統 中油（8”*1500磅）球塞閥一批 中油（26”*600磅）球塞閥一批	900萬
中油全焊式球塞閥（Fully Welded Body）	400萬
五股配氣站球塞閥系統	700萬
彰濱電廠球塞閥系統 （Fully Welded Body）	500萬
豐德電廠球塞閥系統	500萬

億承企業股份有限公司
機械設備、檢驗設備表

1、機械設備：

項目	檢 驗 設 備 名 稱	規 格	數 量
1	大同CNC車床	TL-15S	7台
2	大同CNC車床	TL-15LB	3台
3	永進銑床		7台
4	OKUMA車床	LB-15D	1台
5	SHE 2000型車床		1台
6	高速車床		2台
7	帶柄球專用機		2台
8	立式銑床		1台
9	立臥式傳統銑床		1台
10	立式鉆孔攻牙機		2台
11	圓球研磨機		1台

2、檢驗設備：

項目	檢 驗 設 備 名 稱	規 格	數 量
1	SHIMADZU分光儀	OES-5500Ⅱ	1台
2	硬度試驗機	HLN-11A	1台
3	扭力扳手		2支
4	水壓試驗機		2台
5	氣壓試驗機		1台
6	成品氣壓試驗機		2台
7	平台式氣壓試驗機		3台
8	大型水壓試驗機		1台
9	氮氣試驗機		2組
10	長型游標尺	1500mm	1支
11	游標尺		40支
12	分厘卡		10支
13	百分量表	10mm	10支
14	牙規、環規		6組

ZV

億承企業股份有限公司

文 件 名 稱 ：

API 6D & API 608

BALL VALVE 之規範與應用

MAJOR SPECIFICATION：

1．API 6D DESIGN & TEST.

2．SPECIAL DESIGN FOR BALL VALVE.

(1)．TRUNNION MOUNTED.

(2)．ANTI STATIC.

(3)．ANTI BLOW-OUT STEM.

(4)．SOLID BALL.

(5)．SECONDARY EMERGENCY SEAL ON STEM & SEAT.

(6)．FIRE SAFE.

(7)．DOUBLE BLOCK & BLEED.(PRESSURE RELIEF)

(8)．DRAIN.

3．球閥設計一般引用規範：

(1)．API 608 METAL BALL VALVES—FLANGED AND BUTT-WELDING ENDS, —1st, 1989

(2)．API 6D SPECIFICATION FOR PIPELINE VALVES(GATE, PLUG, BALL AND CHECK VALVES)—21th, 1994

(3)．BS 5351 STEEL BALL VALVES FOR THE PETROLEUN, PETROCHEMICALS AND ALLIED INDUSTRIES, 1976

(4)．ANSI B16.34 VALVES—FLANGED, THREADED, AND WELDING END, 1988

(5)．ISO 7121 FLANGED STEEL BALL VALVES, 1986

(6)．ISO 5211 FLANGED DIMENSIONS, 1977

4．球閥測試一般引用規範與標準：

(1)．API 598 VALVES INSPECTION AND TESTING—6th, 1990

(2)．API 6D SPECIFICATION FOR PIPELINE VALVES(GATE, PLUG, BALL AND CHECK VALVES)—22th, 2002

(3)．API 607 FIRE TEST FOR SOFT SEATES,QUARTER TURN VALVES—4th, 1993

(4)．BS 6755 TESTING OF VALVES, 1987 PART 2,SPECIFICATION FOR FIRE TYPE—TESTING REQUIREMENT

(5)．API 6FA SPECIFICATION FOR FIRE TEST FOR VALVES, 1st ,(REAFFIRMED)MAY, 1990

(6)．BS6364 VALVES FOR CRYOGENIC SERVICES, 1984 APPENDIX A CRYOGENIC TEST

5．球閥設計特性與應用：

5.1反脫出閥桿設計：

閥球與閥桿採用可分離式之凸凹槽方式結合，閥桿必須有一肩部之安全設計，預防內部壓力或拆卸蓋板時閥桿之脫出。

5.2防火設計：

防火設計係基於火災發生時，若軟性閥座（PTFE）被燒毀破壞，次閥座（金屬閥座）必須有效發揮其關斷能力，而將洩漏量減至最低程度，以防止火災繼續蔓延。

目前一般防火設計之測試程序與標準，以API 607，6FA，BS—6755，…等爲依據。

5.3防靜電設計：

流體在管線內高速通過，摩擦易產生靜電，因軟性閥座（PTFE）爲電絕緣體，閥球與閥體管線絕緣，造成局部靜電上升或集中，萬一遇火花容易發生危險，因此須有防靜電集中裝置之導電設計，而API 608規定其閥體與閥桿間之導體電阻須小於10 Ω。（本廠採用閥球與閥桿間彈簧金屬導電及GRAFOIL PACKING之導電設計）

5.4雙重關斷與排放設計—DOUBLE BLOCK AND BLEED

（1）雙重關斷（DOUBLE BLOCK）

一般在閥球樞軸式之球閥，若採用斜板彈簧墊片或線圈彈簧等加壓設計時，兩端閥座均因彈簧之安裝而獲得壓力，使之推向閥球之表面密封住，具有上下游關斷之功能。

（2）排放洩壓（BLEED ／RELIEF）

若球閥（TRUNNION TYPE）於操作使用關斷時，在下游端之閥座，因受比較低的壓

力，（或僅受彈簧墊片之壓力），而僅僅與閥球表面接觸，然當兩閥座間之空隙，因熱脹而壓力上升，且此上升內壓力比彈簧壓力大時則下游端之彈簧墊片會被頂壓向後，而促使空隙中的過度內壓力得以沿密封圈間排放減低。

（3）排放裝置（DRAIN）

若球閥（TRUNNION TYPE）在上下游有壓力造成雙重關斷時，其閥體最底部之排洩閥（DRAIN VALVE）可操作而排放閥體空穴之流體。

5.5輔助密封設計：

一般TRUNNION TYPE之球閥，尤其全焊型或顧客要求下在閥座兩端，閥桿或樞軸常要求有輔助密封設計，以輔助當軟性閥座（PTFE）受損時有緊急（至少是暫時的）封閉之功能，其一般設計，係將封液由注油槍經注入口打入每個閥座環之特殊設計溝槽，使其流至整個閥座環之接觸面，且封液壓力作用在閥座環背面上，迫使閥座確實與閥球緊緊接觸，其它諸如閥桿或樞軸之軸封亦可有相同輔助設計。

5.6耐低溫設計：

對低溫冷凍閥（CRYOGENIC VALVE）運送液化氣體（氧，氮，氫，氦…）之需求，一般設計須符合BS 6364 VALVE FOR CRYOGENIC SERVICE及APPENDIX A CRYOGENIC TEST之需求，此測試要求爲將閥浸於-196℃之液態氮中，再通以氦氣做壓力測試並記錄其操作扭力；於此必需考慮下列特性：

（1）延伸閥蓋／牛楠（EXTENDED BONNET／GLAND）：

氣室之設計必須有一足夠之氣室，防止閥桿填料與閥桿因熱脹冷縮差異而影響密封與操作。

（2）閥門洩壓裝置：

閥球須於下游端鑽一小孔，以平衡管線與閥內空隙（關閉時）因熱脹或液體氣化時所產生之壓力。

5.7軟性閥座材質：

一般球閥之軟性閥座材質，常因操作溫度及壓力高低而被限制使用，API 608亦表列出PTFE之額定壓力—溫度需求（如表一所示）。

（1） PTFE（RTFE）：－200℃～250℃，耐酸鹼及各種流體，廣泛使用。目前亦有添加石墨，青銅…等之產品使用，其特色列於表二中。

（2） FPM：－20℃～200℃能耐各種侵蝕之流體，但不適用於蒸汽及熱水。

（3） EPDM：－20℃～180℃適用於熱水，蒸汽，煤油，但不耐礦油類之流體。

（1） PTFE（RTFE）：－200℃～250℃，耐酸鹼及各種流體，廣泛使用。目前亦有添加石墨，青銅…等之產品使用，其特色列於表二中。

（2） FPM：－20℃～200℃能耐各種侵蝕之流體，但不適用於蒸汽及熱水。

（3） EPDM：－20℃～180℃適用於熱水，蒸汽，煤油，但不耐礦油類之流體。

（4） NBR：－20℃～100℃適用於低濃度帶有顆粒之油與鹼液。

（5） POM：－20℃～100℃適用於油壓，高壓之應用。

5.8金屬座面材質（METAL TOUCH SEATS）：

（1）鍍硬鉻（H Cr PLATING）

400℃以下使用，耐蝕性，耐磨耗性尚佳，有其限度但較便宜，被廣泛應用。

（2）鍍鎳（Ni- PLATING）

400℃以下使用，耐蝕性，耐磨耗性尚佳，亦被廣泛應用。

（3）鎳溶射

600℃以下使用，有較佳之耐蝕性，耐磨耗但成本較高。

（4）STELLITE FACING（Co系）

650℃以下使用，有極佳之耐磨耗性，耐蝕但成本高。

（5）氮化鈦（鋯）

800℃以下，高溫，高壓使用，有極佳之高溫硬度耐磨耗性，但成本極高。

（6）碳化鎢，陶瓷噴塗

400℃以下使用，（因高壓與母材間熱膨脹差異，可能有裂痕發生）但耐磨耗性、耐蝕性、耐熱性俱佳，成本亦貴。

（7）真空鍍鉻（Cr）

爲在金屬閥座上鍍硬鉻，引用於低壓粉體。

（8）其它氮化法及析出硬化型不鏽鋼使用…等方式。

表一：PTFE／RTFE額定溫度—壓力表

API STANDARD 608

Table 1-Minimum Seat Pressure-Temperature Ratings (Pounds per Square inch Gauge

Temperature (degrees fshrcnhcit)		PTFE*Seat			Reinforced PTFE*Seat		
		Floating Ball		Trunnion (all size)	Floating Ball		Trunnion (all size)
		≦6 inches**	>6 inches**		≦6 inches**	>6 inches**	
≦	100	740	285	740	740	285	740
	150	610	235	610	625	240	625
	200	485	190	485	515	200	515
	250	355	140	355	400	155	400
	300	230	90	230	275	110	275
	350	100	40	100	125	50	125
	400	-	-	-	50	20	50

Note：For a given class, the seat pressure-temperature ratings shall not exceed the shellratings in ASTM B16.34

*Polytetrafluoroethylene

**Valve nominal pipe size

表二：摩擦、PV值、摩耗係數

性　質	純鐵氟龍 (PTFE)	玻璃纖維 (Glass Fibre) 15%	玻璃纖維 (Glass Fibre) 25%	石墨 (Graphite) 15%	青銅 (Bronze) 60%	玻璃纖維 20% 石墨 5%	玻璃纖維 15% 硫化鉬 (MOS2)
PV值(kg/cm^2 · m/sec)							
0.05 m/sec	0.4	3.5	3.5	3.5	5.3	3.9	3.9
0.5 m/sec	0.6	4.4	4.6	6.0	6.5	5.3	4.9
5 m/sec	0.9	5.3	5.6	9.8	10.4	7.7	6.1
無潤滑，1000小時，摩耗0.013cm情況下的PV值kg/cm^2 · m/sec 磨耗係數 “K”		1.1	1.8	0.5	2.9	1.2	1.9
cm^3 · m/sec×106	10660	11.4	7.1	24.2	4.3	10.6	6.4
K · M · hr 靜摩擦係數(荷重230kg)	0.05-0.08	0.10-0.13	0.10-0.13	0.08-0.10	0.08-0.10	0.08-0.10	0.08-0.10
動摩擦係數(PV值 2.9-3.6 kg/cm^2 · m/s)							
0.05 m/sec	0.10	0.20-0.22	0.17-0.21	0.12-0.16	0.14-0.22	0.12-0.15	0.12-0.13
0.5 m/sec	0.13	0.27-0.40	0.26-0.29	0.20-0.26	0.35-0.50	0.24-0.50	0.32-0.35
5 m/sec	不安定	0.37-0.50	0.30-0.45	0.30-0.31	0.16-0.24	0.24-0.37	0.19-0.24

本表摘自製閥工業設計技術手冊3-136表八

ZV

鋼閥之額定壓力—溫度表（四）
API 6D壓力測試
閥之標準法蘭端，焊接端壓力測試表
SCHEDULE OF TEST PRESSURES FOR STANDARD FLANGED END AND STANDARD WELD END VALVES
(Ref.Metric Table B5.1)

1	2	3
Valve Pressure Class	Minimum Test Pressure,psig	
	Shell Hydrostatic	Seat Hydrostatic
150	425	300
300	1100	800
400	1450	1060
600	2175	1600
900	3250	2400
1500	5400	4000
2500	9000	6600

The test pressures listed are NOT valve operating pressure ratings.

流體測試最短時間表
MINIMUM DURATION OF HYDROSTATIC TESTS

1	2	3
Valve Size NPS(DN)	Shell test duration minutes	Seat test duration minutes
2 thru 4 (50 thru 100)	2	2
6 thru 10 (150 thru 250)	5	5
12 thru 18 (300 thru 450)	15	5
20 thru larger (500 and larger)	30	5

ZV

背壓及空壓壓力測試表
PRESSURES FOR OPTIONAL BACK STANDARD AIR SEAT TESTS
(Ref.Metric Table B5.3)

Valve Pressure Class	High Pressure Backseat psig min	Low Pressure Backseat psig ±10	Air Seat psig ±10
150	300	80	80
300	800	80	80
400	1060	80	80
600	1600	80	80
900	2400	80	80
1500	4000	80	80
2500	6000	80	80

背壓及空壓壓力測試最短時間表
MINIMUM DURATION OF OPTIONAL BACKSEAT AND AIR SEAT TESTS

Valve Size NPS(DN)	Duration minutes
2 thru 4 (50 thru 100)	2
6 and larger (150 and larger)	5

註：依據API 6D — TWENTY-FIRST EDITION,MARCH 1994

API 598
壓力測試（PRESSURE TEST）

1．測試介質—水

UNIT：PSIG(KG/CM²)

材質	WCB/A105		LCC/LF2		WC6/F11		WC9/F22	
CLASS	SHELL	CLOSURE	SHELL	CLOSURE	SHELL	CLOSURE	SHELL	CLOSURE
150#	450(32)	315(23)	450(32)	320(23)	450(32)	320(23)	450(32)	320(23)
300#	1125(80)	815(58)	1125(80)	825(58)	1125(80)	825(58)	1125(80)	825(58)
600#	2225(157)	1630(115)	2250(258)	1650(116)	2250(158)	1650(116)	2250(158)	1650(116)
800#	2975(209)	2175(153)	3000(211)	2200(155)	3000(211)	2200(155)	3000(211)	2200(155)
900#	3350(236)	2445(172)	3375(237)	2475(174)	3375(237)	2475(174)	3375(237)	2475(174)
1500#	5575(392)	4080(287)	5625(396)	4125(290)	5625(396)	4125(290)	5625(396)	4125(290)
2500#	9275(653)	6790(478)	9375(659)	6875(484)	9375(659)	6875(484)	9375(659)	6875(484)

材質	C5/F5		CF8/F304		CF8M/F316	
CLASS	SHELL	CLOSURE	SHELL	CLOSURE	SHELL	CLOSURE
150#	450(32)	320(23)	425(30)	305(22)	425(30)	305(22)
300#	1125(80)	825(58)	1100(78)	795(56)	1100(78)	795(56)
600#	2250(158)	1650(116)	2175(153)	1585(112)	2175(153)	1585(112)
800#	3000(211)	2200(155)	2900(203)	2115(149)	2900(203)	2115(149)
900#	3375(237)	2475(174)	3250(229)	2380(168)	3250(229)	2376(168)
1500#	5625(396)	4125(290)	5400(380)	3960(279)	5400(380)	3960(279)
2500#	9375(659)	6875(484)	-	-	-	-

＊註：1.氣壓封閉測試爲80PSI（≒6KG/CM²）
2.依據ANSI B16.34—1988（測試溫度：-20～100℃）
3.800#依據API 602—1993（測試溫度：-20～100℃）

API 598
壓力測試（PRESSURE TEST）

2．最少測試時間（秒）＊
（MINIMUM TEST DURATION, SECONDS)

閥尺寸	SHELL殼體			CLOSURE 封閉	
VALVE SIZE(NPS)	逆止閥 (API STD 594)	其它管閥	後座	逆止閥 (API STD 594)	其它管閥
≦2	60	15	15	60	15
2-1/2～6	60	60	60	60	60
8～12	60	120	60	60	120
≧14	120	300	60	120	120

＊：此測試時間係指管閥完全準備好之後在測試壓力下之檢查期間
1.依據API 598—1990。

3．封閉測試允許最大洩漏率
（MAXIMUM ALLOWABLE LEAKAGE RATES FOR CLOSURE TESTS）

閥尺寸	彈性閥座管閥 (a) (b)	金屬閥座管閥（逆止閥除外）		金屬閥座逆止閥	
VALVE SIZE(NPS)		液體測試 (DROPS/MIMUTE)	氣體測試 (BUBBLES/MIMUTE)	液體測試	氣體測試
≦2	0	0(a)	0(a)	(d)	(e)
2-1/2～6	0	12	72	(d)	(e)
8～12	0	20	120	(d)	(e)
≧14	0	28	168	(d)	(e)

註：(a).在最少規定測試時間內應無洩漏。
(b).潤滑式塞閥可視爲彈性閥座管閥。
(c).對於液體測試，1ml可視爲相當於16滴。對於氣體測試，洩漏量係根據氣體比液體約爲6：1而訂。
(d).最大容許洩漏量應爲3cc/min/inch。
(e).最大容許洩漏量應爲0.042m^3/hr/inch。
(f).依據API 598—1990。

Certificate of Approval

Awarded to

YEAH CHIENG ENTERPRISE CO., LTD.
NO. 71-3, SHEN TZUEN ROAD, SHEN KANG, TAICHUNG
TAIWAN, R.O.C.

Bureau Veritas Quality International certify that the Quality Management System of the above supplier has been assessed and found to be in accordance with the requirements of the quality standards detailed below

QUALITY STANDARDS

BS EN ISO 9001:2000

SCOPE OF SUPPLY

1.DESIGN, MANUFACTURE AND SUPPLY OF BALL VALVE.
2.SUPPLY OF CONTROL VALVE.

Original approval date: **31 May 1999**

Subject to the continued satisfactory operation of the supplier's Quality Management System, this Certificate is valid for a period of three years from:

02 October 2002

Date: **21 October 2002**

Managing Office:
Bureau Veritas Quality International
Taiwan District
6th Fl., No. 3, Tun Hua S. Rd., Sec. 1
Taipei 105, Taiwan, R.O.C.

UKAS
QUALITY MANAGEMENT
008

For Bureau Veritas Quality International (Holding) S.A.,
2nd Floor, Tower Bridge Court
224-226 Tower Bridge Road
London SE1 2TX

Certificate No: **116743**

BVQI (Holding) S.A. using UKAS accreditation covered by the accreditation certificate number 008

ZV

ORIGINAL

LICENSE NO. 6D-0327

American Petroleum Institute

Certificate of Authority to Use Official Monogram

The AMERICAN PETROLEUM INSTITUTE hereby grants to

YEAH CHIENG ENTERPRISE CO., LTD.

Taichung, Taiwan, Republic of China

the right to use the Official Monogram on manufactured products under the conditions specified in the official publications of the American Petroleum Institute entitled API Spec Q1 and **Specification 6D**

and in accordance with the provisions of the License Agreement.

In all cases where the Official Monogram is applied, the Monogram should be used in conjunction with this certificate number **6D-0327** .

The American Petroleum Institute reserves the right to revoke this authorization to use the Official Monogram, for any reason satisfactory to the Board of Directors of the American Petroleum Institute.

Effective Date: APRIL 11, 2000
Expiration Date: APRIL 11, 2003

AMERICAN PETROLEUM INSTITUTE, CORPORATE SEAL, INCORPORATED 1919

AMERICAN PETROLEUM INSTITUTE,

R. William Fritz

Secretary

MATERIAL COMPOSITION

The materials utilized in the **ZV** trunnion ball valves construction include carbon, stainless and alloyed steel, while the commodity valve materials include dual rated A350/LF-2 steel fasteners of B7M/2M, and viton elastomatic seals. The durable coating of the body is of a high quality polyurethane compound. All valves are individually tested to EN 10204 3.1B specification and copies of these tests are available for each serialized valve.

CONTROL VALVES

ZV Ball Valves can be supplied with actuators installed at the factory and covered by a single warranty. Otherwise **ZV** Ball Valves are designed to accept most pneumatic, electric, hydraulic or gas-over-oil actuators. Break-away and run torques are sized to allow for economical actuation packages.

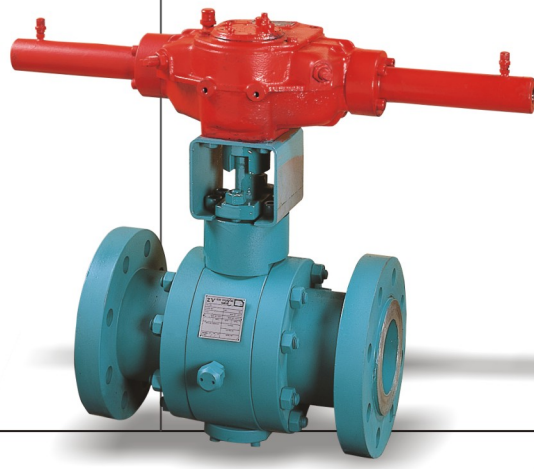

CONSTRUCTION OF THE COMPULSORY FIRE-SAFE DESIGN

When the temperature becomes as high as Viton Seals O_1 O_2 and O_3 are unable to ensure the tightness from point a~b and the Spring S_1 loses elasticity, the Device G, Spiral Wound SS#304/Graphite, will expand naturally to fill up point a to b, then stops leakage. Thus forces Metal Seat to move toward the ball and execute forcibly the function of Metal to Metal tightness.

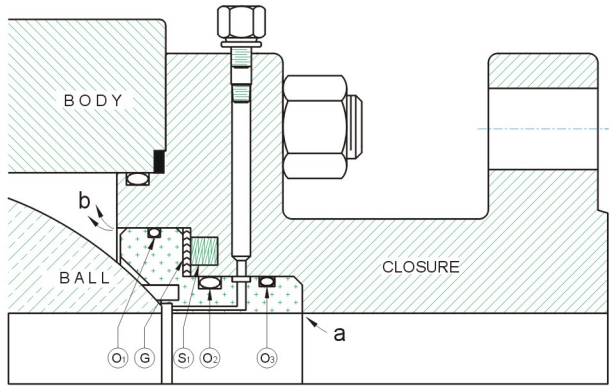

ANTI-STATIC, ANTI-BLOWOUT

ZV Ball Valves feature with Anti-blowout proof stems and anti-static devices. Electrical continuity between the ball and stem, and between stem and body is verified after final.

BURIED SERVICE

ZV Ball Valves can be supplied in accordance with **ZV**'s standards or customized to individual standards. Full protection of these **ZV** Ball Valves components, include fasteners, worm gears and pressure equalizing devices, are standard in **ZV** Buried service valves.

DOUBLE BLOCK AND BLEED

All **ZV** trunnion mounted ball valves feature with the block and bleed principle. Furthermore 6" sizes and large can be completely flushed while the valve is still under pressure in the closed position. This is accomplished when using the drain valve and vent hole simultaneously.

The illustration shows the up-stream pressure (Pu), and the down-stream pressure (Pd), being restrained independently from the body pressure (Pb).

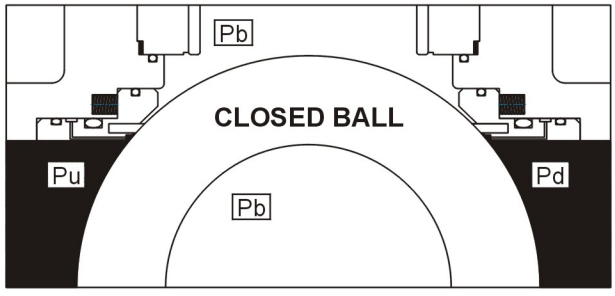

N.A.C.E. MR0175

ZV Trunnion Ball Valves are designed to N.A.C.E. specification MR0175 for sizes above 4". For size range 4" and smaller, material for balls, seats and stems feature with 316 stainless steel.

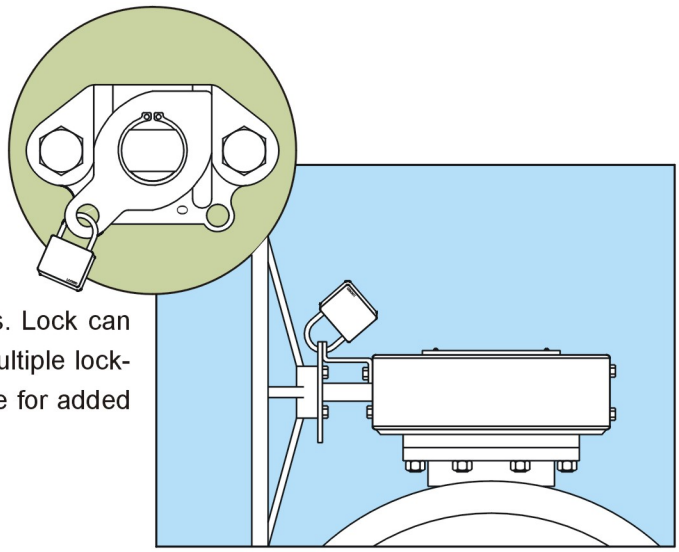

LOCKING DEVICES

These are standard on all **ZV** Trunnion Ball Valves. Lock can be applied on both lever and gear as illustrated. Multiple lock-templates and interlocking device are also available for added security.

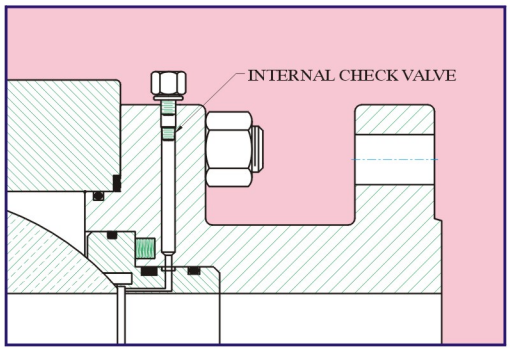

EMERGENCY SEALANT INJECTION

Under normal conditions, **ZV** Ball Valves do not require lubrication. But should a seal become damaged, a temporary seal can be provided by a secondary sealant injection. Such injection is standard on 6" and larger valves. For smaller valves, it is provided when requested.

VALVE CAVITY PRESSURE RELIEF

All **ZV** Trunnion Ball Valves are provided with a pressure relief device to allow media trapped in the body cavity. Therefore, pressure can be relieved after valve is closed, Pressure relief is important to avoid pressure build-up due to temperature changes.

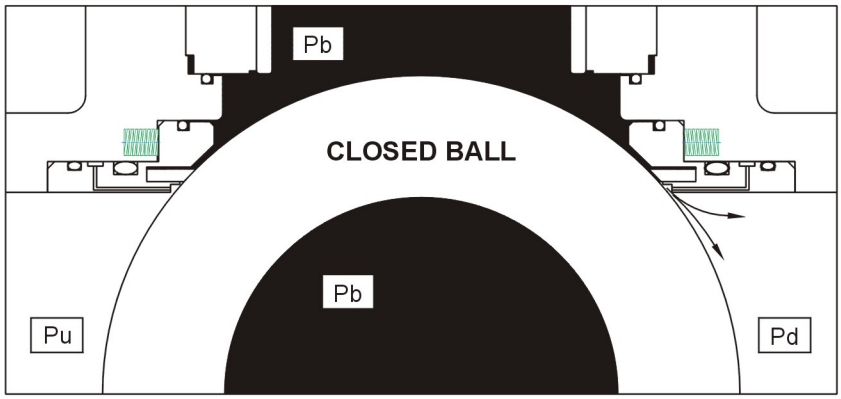

METAL-TO-METAL SEATS

When the valves are applied in high temperature or corrosive/erosive conditions, **ZV** Ball Valves can be supplied with metal-to-metal seals as per ANSI/FCI 70-2 class "V" shut-off requirements. This metal-to-metal feature utilizes mechanically bonded overlay, such as tungsten carbide.

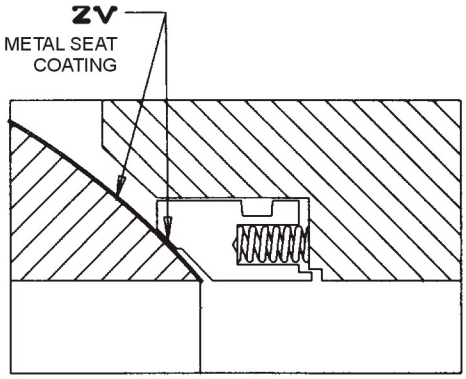

WELD OVERLAY TECHNOLOGY

The overlaying of valve seals and "bore" areas, for high corrosive and erosive services, is a cost saving proposition as this technique is a fraction of the cost of completely alloy materials, while providing equally protective service.

STANDARD DESIGN FEATURES:

- **Anti-Static Device**- Internal parts that are insulated from the valve body by seats and seals which are made of nonconductive materials may build up a static electrical charge. It is to ensure electrical continuity between the stem, ball and body.
- **Encapsulated Body Seals**-Improved sealing with fully encapsulated body seals can prevent movement or slippage of seal.
- **Bubble-Tight Sealing** is achieved by the use of two rigid seats firmly secured in the valve body on either side of the ball. Media flow is cut off on the downstream side by upstream pressure pushing against the ball.
- **Stem Features**- The stem is designed to include a collar to provide protection against blow-out as well as a double-flat shape at the top of the stem to indicate ball position. All **ZV** valves use the austenitic stainless steel Trim.
- **Equalized Cavity Pressure**- The pressure equalization hole at the top of the ball combined with the special seat design is engineered to maintain the pressure balance in the line and in the body cavity behind the ball while the valve is in the open or closed position.
- **Fire safe**- In accordance with API 607, 4th edition, full metal-to-metal contact is attained at all sealing areas after the primary soft seals have been destroyed during a fire.
- **Bi-Directional Sealing**- With the bi-directional sealing design of the **ZV** Floating Ball Valves, either end can be installed upstream without compromising the integrity of the bubble-tight seal.
- **PTFE Packing Material** is the primary material used for packing because of relatively low sealing force requirement, excellent emission control, good chemical and thermal resistance.
- **Optional Features**- Electric/Pneumatic/Hydraulic/Gas-over-oil actuation or Gear/Lever operator.
- **Solid Ball**- For each size and type.
- **RF Flanges** -Smooth 125-250 Ra standard gasket finish.

ZV Ball Valves are designed to meet the following industry standards:

ITEM		AMERICAN STANDARD
Pressure- Temperature Ratings	Valve Shell	ANSI B16.34
	Ball Seat	See P-T Ratings(PAGE 36)
Shell Wall Thickness		ANSI B16.34 / BS 5351
Face-to-Face Dimensions		ANSI B16.10
End Flange Dimensions / Flange Gasket Facing		ANSI B16.5
Pressure Test		API 598 / API 6D
Firesafe Test		API 607
Design Standard		API 608/MSS-SP-72

CERTIFICATION OF QUALITY AND DESIGN

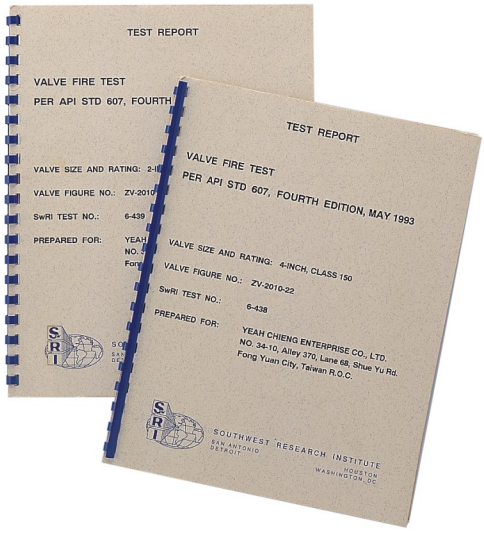

Quality systems are a way of life at **ZV**. Det Norske Veritas is the certifying agency for our ISO 9001 Quality System. In addition, **ZV** functions under the requirements of an API Q1 quality program. Our facilities and quality programs are always open to customer audits.

Our API 6D licenses are maintained on a current basis. Each and every **ZV** trunnion ball valve is monogrammed and serialized under our ISO 9001 (BVQi).

The complete **ZV** trunnion ball valve line has been designed and tested to ensure that the external and through-bore maximum allowable leakage rates are maintained in the event of a fire. Independent laboratories are used to firesafe test our products to the latest edition of API 607 and firesafe standards.


ORIGINAL LICENSE NO. 6D-0327

American Petroleum Institute

Certificate of Authority to Use Official Monogram

The AMERICAN PETROLEUM INSTITUTE hereby grants to

YEAH CHIENG ENTERPRISE CO., LTD.

Taichung, Taiwan, Republic of China

the right to use the Official Monogram on manufactured products under the conditions specified in the official publications of the American Petroleum Institute entitled API Spec Q1 and **Specification 6D**

and in accordance with the provisions of the License Agreement.

In all cases where the Official Monogram is applied, the Monogram should be used in conjunction with this certificate number **6D-0327**

The American Petroleum Institute reserves the right to revoke this authorization to use the Official Monogram, for any reason satisfactory to the Board of Directors of the American Petroleum Institute.

Effective Date: APRIL 11, 2000
Expiration Date: APRIL 11, 2003

AMERICAN PETROLEUM INSTITUTE,

Secretary


BVQi

Certificate of Approval

Awarded to

ZV **YEAH CHIENG ENTERPRISE CO., LTD.**
NO. 71-3, SHEN TZUEN ROAD, SHEN KANG, TAICHUNG
TAIWAN, R.O.C.

Bureau Veritas Quality International certify that the Quality Management System of the above supplier has been assessed and found to be in accordance with the requirements of the quality standards detailed below

QUALITY STANDARD:
BS EN ISO 9001:2000
SCOPE OF SUPPLY

1.DESIGN, MANUFACTURE AND SUPPLY OF BALL VALVE.
2.SUPPLY OF CONTROL VALVE.

Original approval date: **31 May 1999**

Subject to the continued satisfactory operation of the supplier's Quality Management System, this Certificate is valid for a period of three years from:

02 October 2002

Date: **21 October 2002**

Managing Office:
Bureau Veritas Quality International
Taiwan Division
4th Fl., No. 1, Yan Hua S. Rd., Sec. 1
Taipei 105, Taiwan, R.O.C.

UKAS

For Bureau Veritas Quality
International Certification U.K.
2nd Floor, Temple Back East
25A-25B Tower Bridge Road
London SE1 2TX

Certificate No: **116743**

ZV offers a wide range of floating ball valves. Thanks to computerized measuring equipment we can guarantee machined components and shell molded casting's conformity to strict design specifications and industry standards that meet the needs of today's market. Shell molded castings in both carbon steel and stainless steel enables us to supply one-piece standard port and two-piece full port designs.

ZV Ball Valves are designed in accordance with ANSI, API and DIN. Materials of construction are in accordance with ASTM or DIN. The design and construction of **ZV Floating Ball Valves** can be used in many industries: Chemical, Petrochemical, Pulp and Paper, Refining, Oil and Gas Production, Steel, Pharmaceutical, Power industries.

Available size range and pressure classes:

- Full Port Valves are offered in 1/2" to 14" Class 150, 1/2" to 12" Class 300, 1/2" to 6" Class 600.
- Standard Port Valves are available in 3/4" to 12" Class 150, 1" to 8" Class 300 and 2" to 6" Class 600 .
- ANSI/DIN/JIS Flanges, B.W., S.W. and RTJ ends are available.

Other ZV Products Line:

- Extended Bonnet Ball Valves:
  Available size range and pressure classes are as same as above.
- Wafer Type Ball Valves:
  Size:2" to 6",Standard & Full Port, Class 150/300
- Trunnion Mounted Ball valves:
  Size:2" to 36" Class 150/300/600, 2" to 24" Class 900/1500, Standard & Full Port.
  All **ZV** Trunnion Ball Valves are design to meet API 6D requirement.
- Options-consult factory manager for options not listed above.

TRUNNION BALL VALVES SERIES 3000
STANDARD AND FULL PORT DESIGN

RF End Ball Valve
(Lever Operator)

RF End Ball Valve
(Pneumatic Operator)

RF End Ball Valve
(Electric Operator)

Fully Welded Body Ball Valve
(Bare Stem)

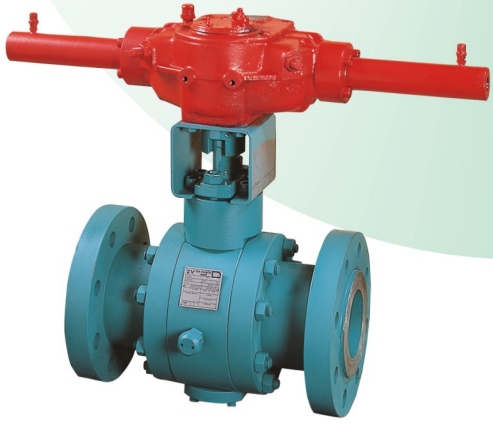

RF End Ball Valve
(Hydraulic Operator)

Butt Welded End Ball Valve
(Gear Operator)

3-PC TRUNNION FLANGE END BALL VALVE
STANDARD AND FULL PORT DESIGN-SERIES 3000

2"-4" VALVE SIZE

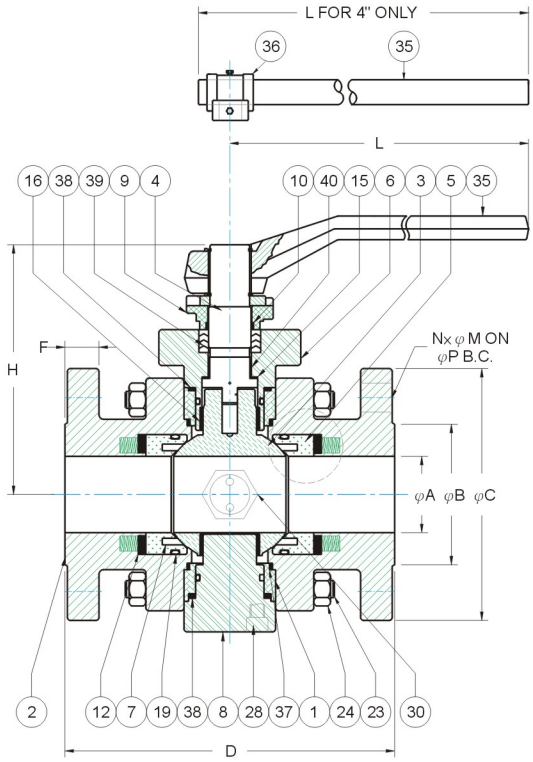

6"-20" VALVE SIZE

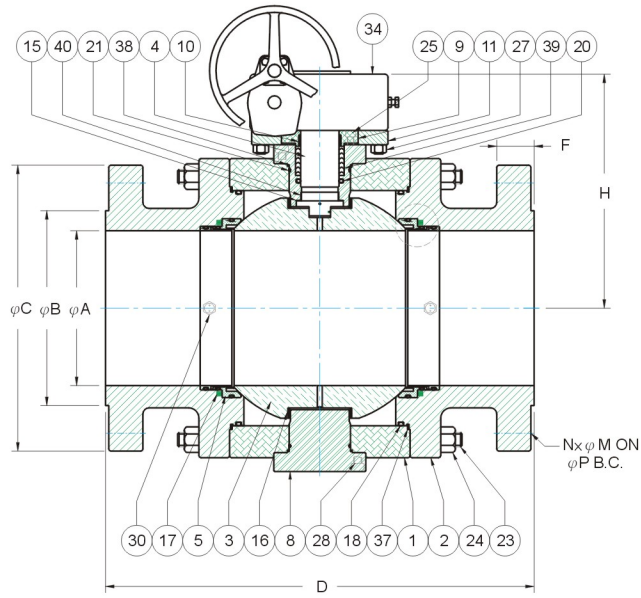

SEAT DETAIL

2"~4"

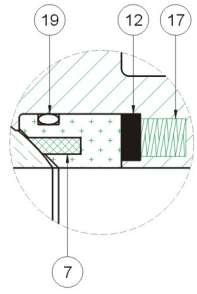

6"~36"

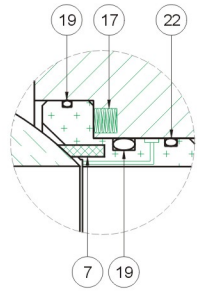

24"-36" VALVE SIZE

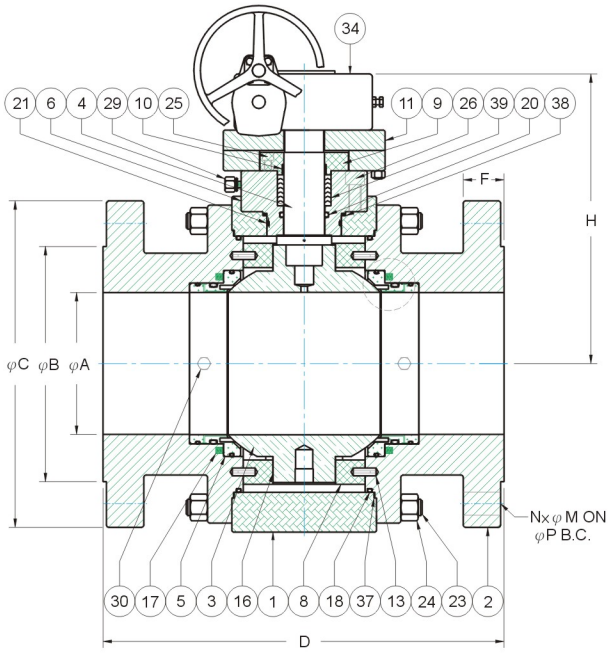

WORM GEAR OPERATOR

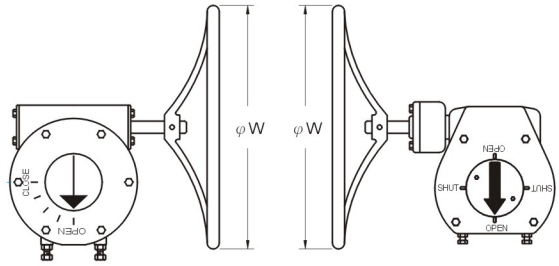

3-PC TRUNNION FULLY WELDED BODY BALL VALVE
STANDARD AND FULL PORT DESIGN-SERIES 3000

2"-4" VALVE SIZE

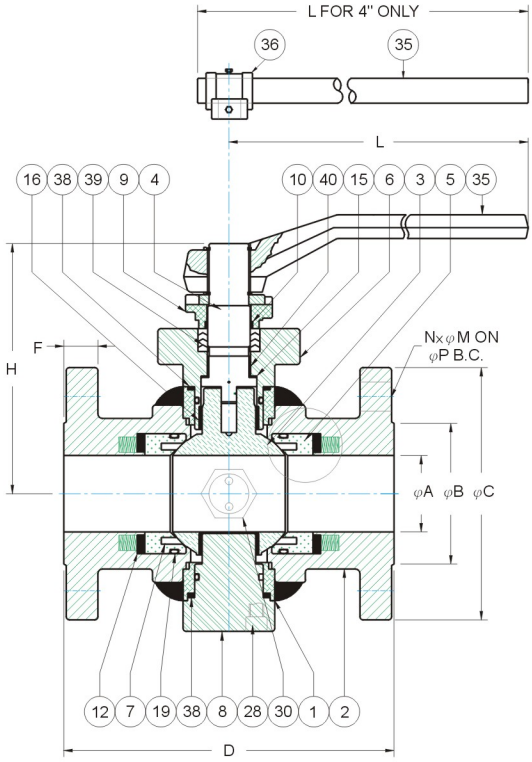

6"-20" VALVE SIZE

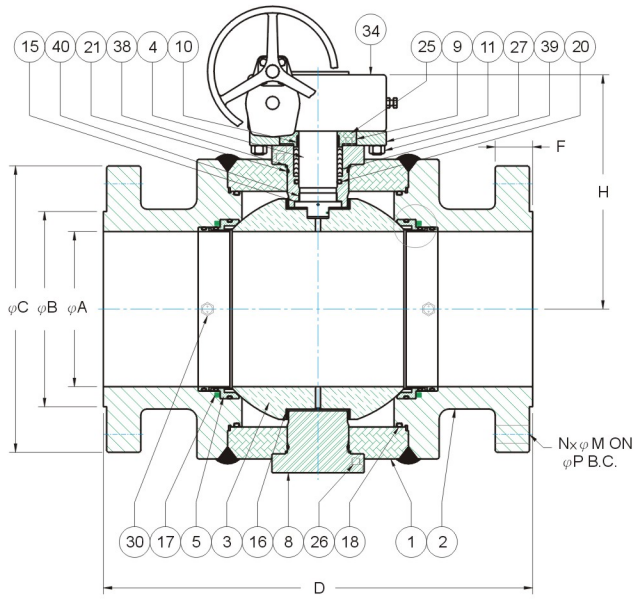

SEAT DETAIL

2"~4"

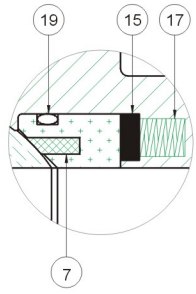

6"~36"

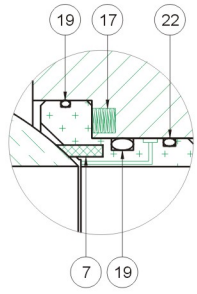

24"-36" VALVE SIZE

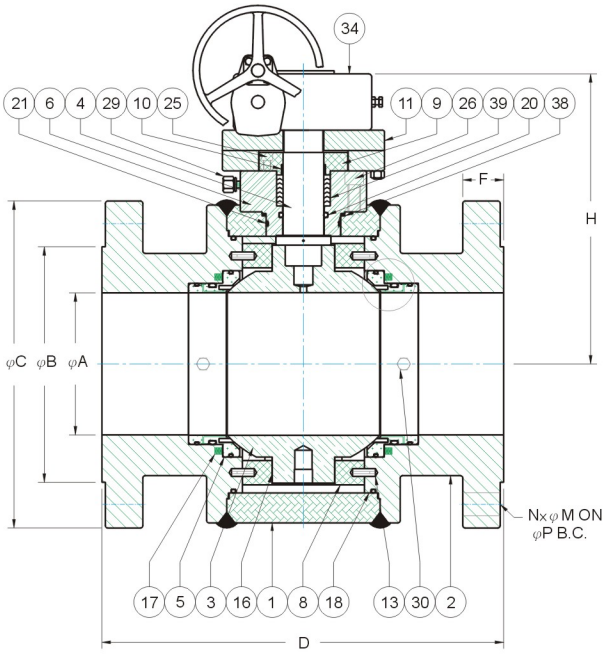

WORM GEAR OPERATOR

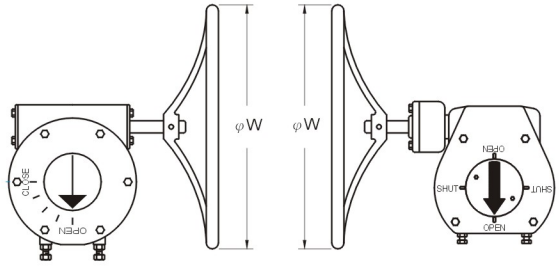

3-PC TRUNNION BUTT WELDED END BALL VALVE
STANDARD AND FULL PORT DESIGN-SERIES 3000

2"-4" VALVE SIZE

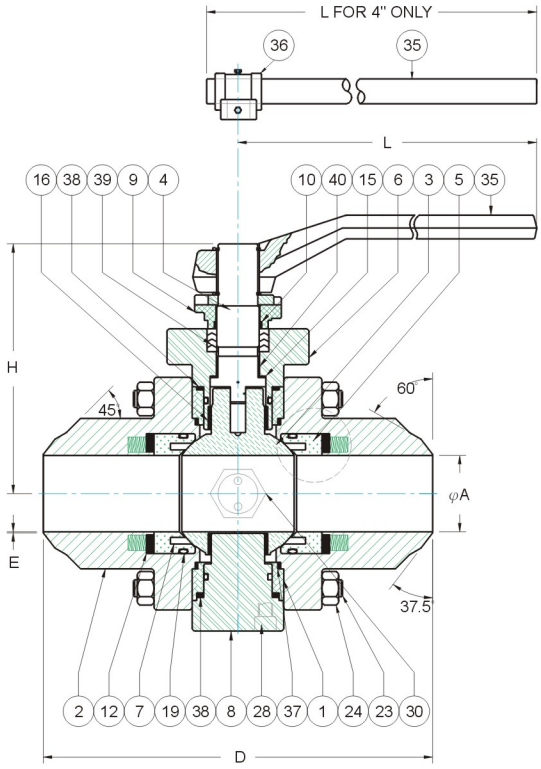

6"-20" VALVE SIZE

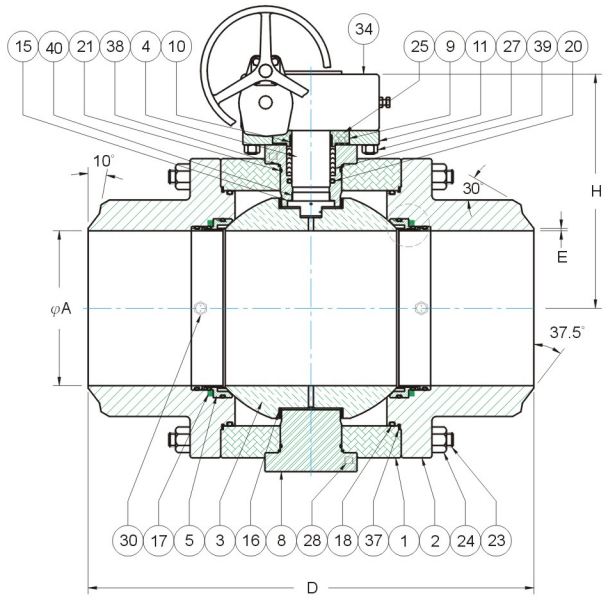

SEAT DETAIL

2"~4"

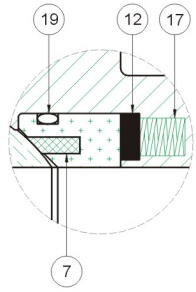

6"~36"

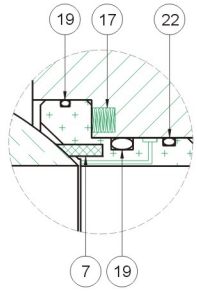

24"-36" VALVE SIZE

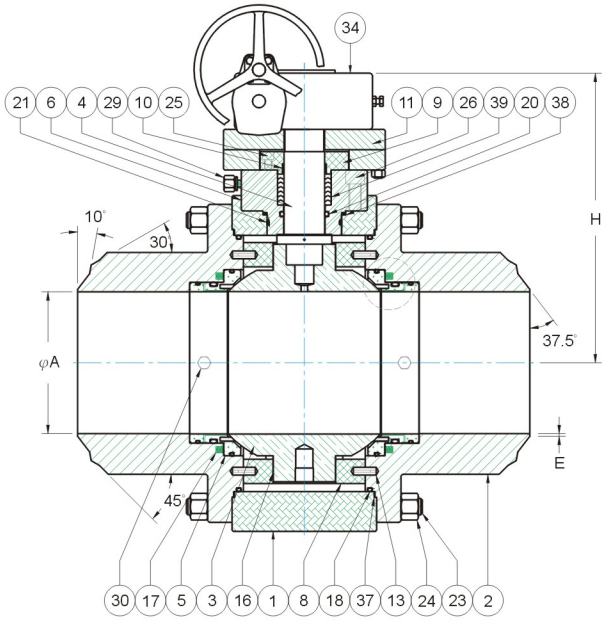

WORM GEAR OPERATOR

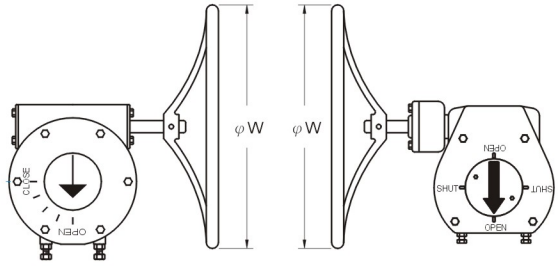

NOTES:

1. Pups pieces and/or transition pieces (L=300mm for 12" & smaller, L=600mm for 14" & larger) with same material of pipe shall be welded to the welded ends of valves.
2. Ends of pups and/or transition pieces are to be beveled to the requirements of ANSI B31.8

TRUNNION BALL VALVES
CALASS 150/300/600/900/1500 SERIES 3000
PARTS AND BILL OF MATERIALS

Part No.	Part Name	ASTM A105, A216 WCB	ASTM A350 LF2	ASTM A182 F316, A351 CF8M
1	Body	ASTM A105 / A216 WCB	ASTM A350 LF2	ASTM A182 F316 / A351 CF8M
2	Closure	ASTM A105 / A216 WCB	ASTM A350 LF2	ASTM A182 F316 / A351 CF8M
3	Ball	ASTM A105 ENP / ASTM A350 LF2 ENP / ASTM A351 CF8M		
4	Anti-Static Stem	ASTM A276- 316 / ANSI 1018-1045 ENP		
5	Seat Ring	ASTM A105 ENP / ASTM A350 LF2 ENP / ASTM A351 CF8M		
6	Trunnion	ASTM A105	ASTM A350 LF2	ASTM A182 F316 / A351 CF8M
7	Insert, Seat Ring	RPTFE / Nylon / Peek / Vespel		
8	Bearing Retainer	ASTM A105	ASTM A350 LF2	ASTM A182 F316 / A351 CF8M
9	Gland	Carbon Steel / Stainless Steel		
10	Gland Bushing	PTFE / Graphite		
11	Adapter Plate	Carbon Steel / Stainless Steel		
12	Seat Sub Seal	S.S.316 + Grafoil		
13	Tablet Pin	ASTM A193 B7		ASTM A193 B8
14	Stem Key	Carbon Steel		
15	Thrust Washer, Stem	PTFE / Graphite		
16	Bearing, Ball	Du Dry Bearing / Teflon		
17	Spring, Seat Ring	Inconel X 750		
18	O-Ring, Body	Viton-A		
19	O-Ring, Seat Ring	Viton-A		
20	O-Ring, Stem	Viton-A		
21	O-Ring, Retainer & Trunnion	Viton-A		
22	O-Ring, Grease Fitting	Viton-A		
23	Body Stud	ASTM A193 B7(M)		ASTM A193 B8(M)
24	Body Nut	ASTM A194 2H(M)		ASTM A194 8A or 8
25	Cap Screw, Gland	Carbon Steel		Stainless Steel
26	Cap Screw, Trunnion	Carbon Steel		Stainless Steel
27	Nut, Adapter Plate	Carbon Steel		Stainless Steel
28	Cap Screw, Retainer	Carbon Steel		Stainless Steel
29	Grease Fitting, Stem	Carbon Steel		
30	Grease Fitting, Seat	Carbon Steel		
31	Check Valve	Carbon Steel		
32	Vent Plug	Carbon Steel		
33	Drain Valve	Carbon Steel		
34	Worm Gear Operator	Commercial		
35	Handle	Ductile Iron		
36	T-Coup	Ductile Iron		
37	Gasket, Body	PTFE / Graphite		
38	Gasket, Retainer & Trunnion	PTFE / Graphite		
39	Stem Packing	PTFE / Graphite		
40	Stem Bearing	PTFE / Graphite		

VALVE BODY RATING

These are maximum working pressure ratings for the valve body only. The seat ratings determine the practical pressure limitations according to actual service conditions. Test pressures are for hydrostatic test with ball half open.

		PSI BY CLASS			
MATERIAL	TEMPERATURE	150	300	600	MIN.ALLOW TEMP.
ASTM A105	-20 to 200F	285	740	1480	-20F
ASTM A350 LF2	-20 to 200F	285	740	1480	-50F
ASTM A182 F316	-20 to 200F	275	720	1440	-80F

Above ratings correspond to ratings of ANSI B16.34-1988 for the material grades shown in the bill of materials. If F316 stainless steel valves are to be used below -20°F the order should specify.

VALVE SEAT RATINGS

The seat ratings, indicated by the bold lines in the chart, are based on differential pressure with the valve ball in the fully closed position and refers to the seats only.

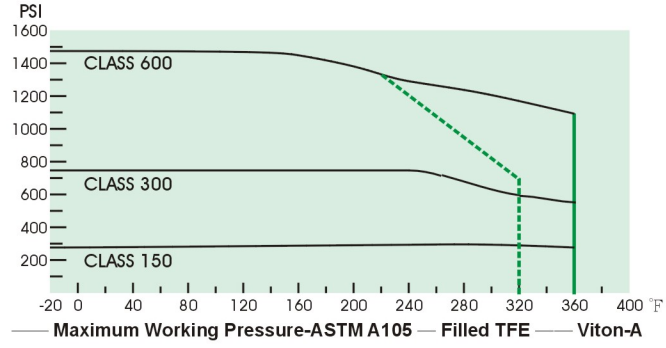

2" - 36" Trunnion Ball Valves – Class150

Valve Size	Approximate dimension is mm												Approx Wt. kg	Cv
	φA	φB	φC	D	E	F	H	L	φW	N	φM	φP		
2	50.0	92.0	152.4	177.8	1.6	15.9	150.0	404.0	-	4	19	120.6	21	500
3	77.0	127.0	190.5	203.2	1.6	19.1	190.0	445.0	-	4	19	152.5	43	1350
4	101.6	157.0	228.6	228.6	1.6	23.9	250.0	1143.0	-	8	19	190.5	65	2500
6	152.4	216.0	279.4	393.7	1.6	25.4	320.0	Gear	510	8	22	241.5	190	5300
8	203.2	270.0	342.9	457.2	1.6	28.6	350.0	Gear	510	8	22	298.5	300	10500
10	254.0	324.0	406.4	533.4	1.6	30.2	370.0	Gear	510	12	25	362.0	405	17500
12	304.8	381.0	482.6	609.6	1.6	31.8	470.0	Gear	510	12	25	432.0	585	26300
14	336.6	413.0	533.4	685.8	1.6	35.0	510.0	Gear	510	12	28	476.5	805	31850
16	387.3	470.0	596.9	762.0	1.6	36.6	540.0	Gear	510	16	28	539.5	1214	43300
18	438.2	533.0	635.0	863.6	1.6	39.7	590.0	Gear	510	16	32	578.0	1410	57300
20	489.0	584.0	698.5	914.4	1.6	42.9	615.0	Gear	760	20	32	635.0	1719	74500
24	590.6	692.0	812.8	1066.8	1.6	47.7	770.0	Gear	760	20	35	749.5	3180	112300
26	635.0	749.0	870.0	1143.0	1.6	68.3	785.0	Gear	760	24	35	806.5	3770	116800
28	685.8	800.0	927.1	1244.6	1.6	71.4	889.0	Gear	760	28	35	863.6	4635	136850
30	736.6	857.0	984.3	1295.4	1.6	74.7	942.0	Gear	760	28	35	914.4	5370	161700
32	781.0	914.0	1060.5	1371.6	1.6	80.8	950.0	Gear	760	28	41	977.9	6960	182650
34	831.9	965.0	1111.3	1473.2	1.6	82.6	990.6	Gear	760	32	41	1028.7	7950	207800
36	876.3	1022.0	1168.4	1524.0	1.6	90.4	1092.0	Gear	760	32	41	1085.9	8950	233600

Note: 1. Standard Port Design Information Available; 2. Operation 2" ~4" Lever Actuated, 6:~36" Gear Actuated; 3.Height of raised face is 1.6mm each

2" - 36" Trunnion Ball Valves – Class300

Valve Size	Approximate dimension is mm												Approx Wt. kg	Cv
	φA	φB	φC	D	E	F	H	L	φW	N	φM	φP		
2	50.0	92.0	165.1	215.9	1.6	22.3	150.0	404.0	-	8	19	127.0	27	460
3	77.0	127.0	209.6	282.7	1.6	28.6	190.0	445.0	-	8	22	168.0	55	1150
4	101.6	157.0	254.0	304.8	1.6	31.8	250.0	1143.0	-	8	22	200.0	83	2200
6	152.4	216.0	317.5	403.4	1.6	36.6	320.0	Gear	510	12	22	270.0	215	5290
8	203.2	270.0	381.0	501.7	1.6	41.3	350.0	Gear	510	12	25	330.0	420	9600
10	254.0	324.0	444.5	568.5	1.6	47.7	370.0	Gear	510	16	29	387.0	598	16750
12	304.8	381.0	520.7	647.7	1.6	50.8	470.0	Gear	510	16	32	451.0	780	25500
14	336.6	413.0	584.2	762.0	1.6	54.0	510.0	Gear	510	20	32	514.5	1100	30050
16	387.3	470.0	647.7	838.2	1.6	57.2	540.0	Gear	510	20	35	571.5	1480	41700
18	438.2	533.0	711.2	914.4	1.6	60.4	590.0	Gear	510	24	35	628.5	1685	55370
20	489.0	584.0	774.7	990.6	1.6	63.5	615.0	Gear	760	24	35	686.0	2440	72300
24	590.6	692.0	914.4	1143.0	1.6	69.9	770.0	Gear	760	24	41	813.0	3610	109150
26	635.0	749.0	971.6	1244.6	1.6	79.3	785.0	Gear	760	28	45	876.3	4810	111900
28	685.8	800.0	1035.0	1346.2	1.6	85.9	889.0	Gear	760	28	45	939.8	5920	131600
30	736.6	857.0	1092.2	1397.0	1.6	92.0	942.0	Gear	760	28	48	997.0	6740	155650
32	781.0	914.0	1149.4	1524.0	1.6	98.6	950.0	Gear	760	28	51	1054.1	8080	173300
34	831.9	965.0	1206.5	1625.6	1.6	101.6	990.6	Gear	760	28	51	1104.9	9260	197800
36	876.3	1022.0	1270.0	1727.2	1.6	104.7	1092.2	Gear	760	32	54	1168.4	10280	219450

Note: 1. Standard Port Design Information Available; 2. Operation 2" ~4" Lever Actuated, 6:~36" Gear Actuated; 3.Height of raised face is 1.6mm each

2" - 36" Trunnion Ball Valves – Class600

Valve Size	Approximate dimension is mm												Approx Wt. kg	Cv
	φA	φB	φC	D	E	F	H	L	φW	N	φM	φP		
2	50.0	92.0	165.1	292.1	1.6	31.8	150.0	404.0	-	8	19	127.0	31	400
3	77.0	127.0	209.6	355.6	1.6	38.2	190.0	445.0	-	8	22	168.0	63	1050
4	101.6	157.0	273.1	431.8	1.6	44.5	250.0	1143.0	-	8	25	216.0	100	1850
6	152.4	216.0	355.6	558.8	1.6	54.1	320.0	Gear	510	12	29	292.0	265	4460
8	203.2	270.0	419.1	660.4	1.6	62.0	350.0	Gear	510	12	32	349.0	480	8730
10	254.0	324.0	508.0	787.4	1.6	69.9	370.0	Gear	510	16	35	432.0	800	14250
12	304.8	381.0	558.8	838.2	1.6	73.1	470.0	Gear	510	20	35	489.0	1068	22550
14	336.6	413.0	603.3	889.0	1.6	76.3	510.0	Gear	510	20	38	527.0	1130	28400
16	387.3	470.0	685.8	990.6	1.6	82.6	540.0	Gear	510	20	41	603.0	1580	38150
18	438.2	533.0	743.0	1092.2	1.6	89.0	590.0	Gear	510	20	45	654.0	2180	50950
20	489.0	584.0	812.8	1193.8	1.6	95.3	615.0	Gear	760	24	45	723.9	2780	65600
24	590.6	692.0	939.8	1397.0	1.6	108.0	775.0	Gear	760	24	51	838.2	4880	98150
26	635.0	749.0	1016.0	1447.8	1.6	114.3	785.0	Gear	760	28	51	914.4	5830	103750
28	685.8	800.0	1073.2	1549.4	1.6	117.6	889.0	Gear	760	28	54	965.2	6940	122650
30	736.6	857.0	1130.3	1651.0	1.6	120.7	942.0	Gear	760	28	54	1022.4	8560	143200
32	781.0	914.0	1193.8	1778.0	1.6	123.7	950.0	Gear	760	28	60	1079.5	9940	160450
34	831.9	965.0	1244.6	1930.4	1.6	127.0	990.6	Gear	760	28	60	1130.3	11570	181550
36	876.3	1022.0	1314.5	2082.8	1.6	130.3	1092.2	Gear	760	28	66	1193.8	13530	199800

Note: 1. Standard Port Design Information Available; 2. Operation 2" ~4" Lever Actuated, 6:~36" Gear Actuated; 3. Height of raised face is 6.4mm each

2" - 36" Trunnion Ball Valves – Class900

Valve Size	Approximate dimension is mm												Approx Wt. kg	Cv
	φA	φB	φC	D	E	F	H	L	φW	N	φM	φP		
2	50.0	92.0	215.9	368.3	1.6	44.5	150.0	404.0	-	8	25	165.1	115	330
3	77.0	127.0	241.3	381.0	1.6	44.5	190.0	445.0	-	8	25	190.5	175	935
4	101.6	157.0	292.1	457.2	1.6	50.8	250.0	Gear	510	8	32	235.0	330	1760
6	152.4	216.0	381.0	609.6	1.6	62.0	320.0	Gear	510	12	32	317.5	860	4405
8	203.2	270.0	469.9	736.6	1.6	69.9	350.0	Gear	760	12	38	393.7	1410	8475
10	254.0	324.0	546.1	838.2	1.6	76.2	419.0	Gear	760	16	38	469.9	2355	14205
12	304.8	381.0	609.6	965.2	1.6	85.6	528.3	Gear	760	20	38	533.4	3545	21430
14	336.6	413.0	641.4	1028.7	1.6	92.2	541.0	Gear	760	20	41	558.8	4435	26800
16	387.3	470.0	704.9	1130.3	1.6	95.3	582.0	Gear	760	20	45	616.0	6260	36700
18	438.2	533.0	787.4	1219.2	1.6	108.0	645.2	Gear	760	20	51	685.8	8970	48700
20	489.0	584.0	857.3	1320.8	1.6	114.3	691.0	Gear	760	20	54	749.3	11380	62500
24	590.6	692.0	1041.4	1549.4	1.6	146.1	775.0	Gear	760	20	67	901.7	18960	94050

Note: 1. Standard Port Design Information Available; 2. Operation 2" ~4" Lever Actuated, 6" ~36" Gear Actuated; 3.Height of raised face is 6.4mm each

2" - 36" Trunnion Ball Valves – Class1500

Valve Size	Approximate dimension is mm												Approx Wt. kg	Cv
	φA	φB	φC	D	E	F	H	L	φW	N	φM	φP		
2	50.0	92.0	215.9	368.3	1.6	44.5	150.0	404.0	-	8	25	165.1	120	330
3	77.0	127.0	266.7	469.9	1.6	54.1	190.0	445.0	-	8	32	203.2	230	830
4	101.6	157.0	311.2	546.1	1.6	60.2	250.0	Gear	510	8	35	241.3	385	1660
6	152.4	216.0	393.7	704.9	1.6	88.9	320.0	Gear	510	12	38	317.5	1155	4100
8	203.2	270.0	482.6	831.9	1.6	98.3	350.0	Gear	760	12	45	393.7	1935	8010
10	254.0	324.0	584.2	990.6	1.6	114.3	419.0	Gear	760	12	51	482.6	3430	13310
12	304.8	381.0	673.1	1130.3	1.6	130.3	528.3	Gear	760	16	54	571.5	5180	17070
14	336.6	413.0	749.3	1257.3	1.6	139.7	541.0	Gear	760	16	60	635.0	6300	24275
16	387.3	470.0	825.5	1384.3	1.6	152.4	582.0	Gear	760	16	67	704.9	9120	33215
18	438.2	533.0	914.4	1536.7	1.6	168.4	645.2	Gear	760	16	73	774.7	13020	43400
20	489.0	584.0	984.3	1663.7	1.6	184.2	691.0	Gear	760	16	79	831.9	16500	55930
24	590.6	692.0	1168.4	2044.7	1.6	209.6	775.0	Gear	760	16	92	990.6	27500	84025

Note: 1. Standard Port Design Information Available; 2. Operation 2" ~4" Lever Actuated, 6" ~36" Gear Actuated; 3.Height of raised face is 6.4mm each

STANDARDS AND SPECIFICATIONS

ZV Series 3000 Ball Valves conform with the following industry standards and specifications:

API 6D 1994 — American Petroleum Institute-Specifications for Pipeline Valves.

API 607 1993 — American Petroleum Institute-Fire Test for Soft-seated Ball Valves (Div. of Refining).

API 6FA 1999 — American Petroleum Institute-Fire Test for Valves (Div. of Production).

API QI 1999 — Specifications for Quality Programs.

ASME / ANSI B 16.10 1986 — American National Standard-Face-to-Face and End-to-End Dimensions on Ferrous Valves.

ASME / ANSI B 16.5 1996 — American National Standard-Steel Pipe Flanges and Flanged Fittings.

ASME / ANSI B 16.34 1996 — American National Standard Steel Valves-Flanged and Buttwelded End.

ASME / ANSI B 31.1 1990 — American National Standard Chemical Plant and Petroleum Refinery Piping.

ASME B 31.4 1998 — American National Standard-Liquid Petroleum Transportation Piping Systems.

ASME B 31.8 1995 — American National Standard-Gas Transmission and mission and Distribution Piping Systems.

MSS SP-25 1998 — Manufacturers Standardization Society-Standard Marking System for Valves.

NACE Standard MR-01-75 — National Association of Corrosion Engineers-Sulfide Stress Cracking Resistant tant Metallic Materials for Oilfield Equipment.

Title 49-Code of Federal Regulations, Part 192 — Transportation of Natural and Other Gas by Pipeline: Minimum Federal Safety Standards.

ZV Three-Piece, Side-Entry Design Trunnion Ball Valves 2"~36" ANSI Class 150/300/600/900/1500 Full and Standard Port

Typical Constrution

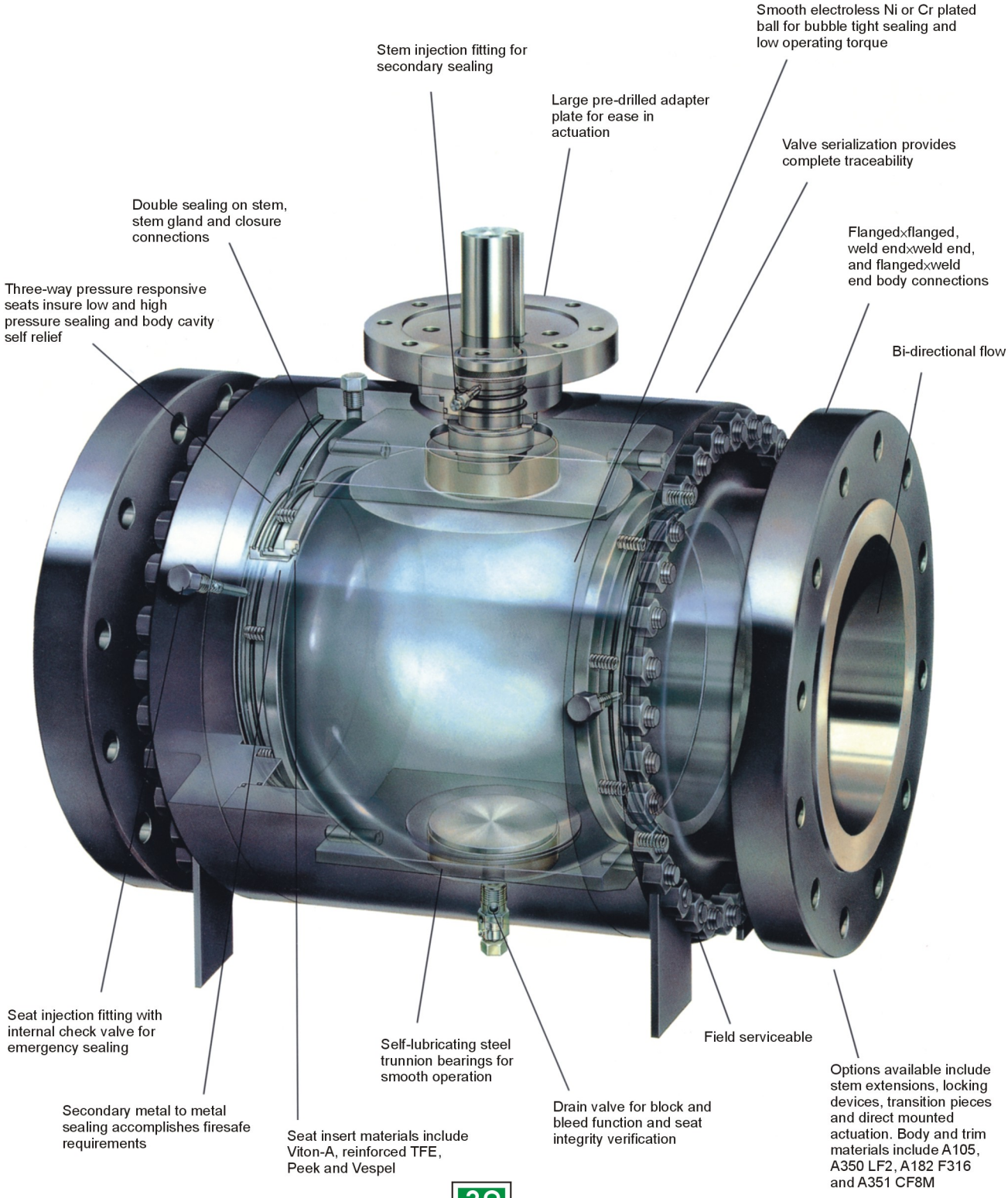

3000 SERIES
FORGED STEEL FULLY WELDED BODY FOR BURIED SERVICE

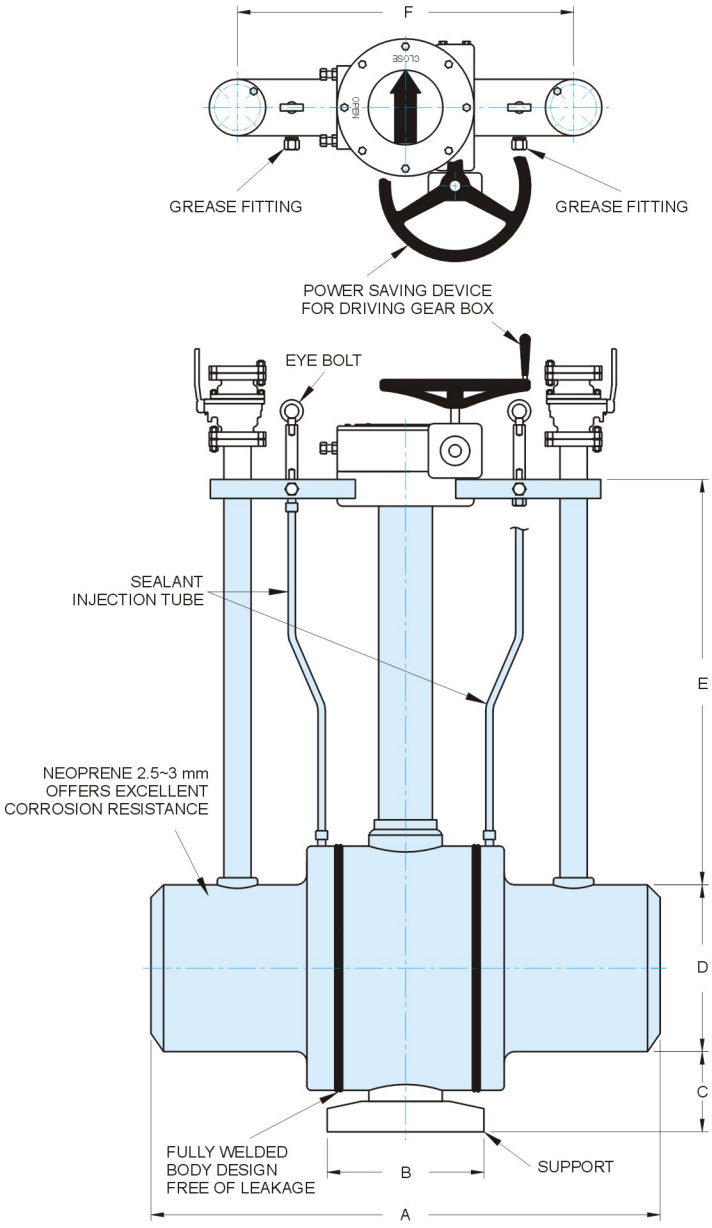

MATERIAL LIST

Body	ASTM A105
Closure	ASTM A105
Anti-Static Stem	ASTM A276-316
Ball	ASTM A351 CF8M
Seat Ring	ASTM A351 CF8M
Trunnion	ASTM A105
Insert, Seat Ring	RPTFE / Nylon
Bearing Retainer	ASTM A105
Gland	Carbon Steel
Gland Bushing	PTFE / Graphite
Adapter Plate	Carbon Steel
Stem Key	Carbon Steel
Thrust Washer, Stem	PTFE / Graphite
Bearing, Ball	Du Dry Bearing
Spring, Seat Ring	Inconel X 750
O-Ring, Body	Viton-A
O-Ring, Seat Ring	Viton-A
O-Ring, Stem	Viton-A
O-Ring, Retainer&Trunnion	Viton-A
O-Ring, Grease Fitting	Viton-A
Cap Screw, Gland	Carbon Steel
Cap Screw, Trunnion	Carbon Steel
Cap Screw, Retainer	Carbon Steel
Grease Fitting, Seat	Carbon Steel
Check Valve	Carbon Steel
Vent Plug	Carbon Steel
Drain Valve	Carbon Steel
Worm Gear Operator	Commercial
Handle Wheel	Ductile Iron
Gasket, Retainer&Trunnion	PTFE / Graphite
Stem Packing	PTFE / Graphite
Stem Bearing	PTFE / Graphite

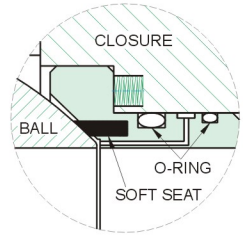

SEAT DETAIL

DIMENSIONS (UNIT=MM)

SIZE	A	B	C	D	E	F
100	905	200x200	120	124	1100(SET)	400
150	1003	230x230	145	176	1100(SET)	460
200	1102	260x260	160	231	1100(SET)	540
250	1168	290x290	175	285	1200(SET)	590
300	1248	320x320	190	336	1200(SET)	650
350	1962	350x350	200	373	1200(SET)	700
400	2038	380x380	220	424	1300(SET)	760
450	2114	420x420	235	475	1300(SET)	820
500	2191	450x450	250	526	1300(SET)	900

NOTES :

- Fully Welded Body Design
- Blowout-Proof Stem
- Face to Face to std B16.10
- Butt Welded Ends to std B16.34
- API 6D Standard

ZV Floating Ball Valve Series 2010/2030 Full Bore

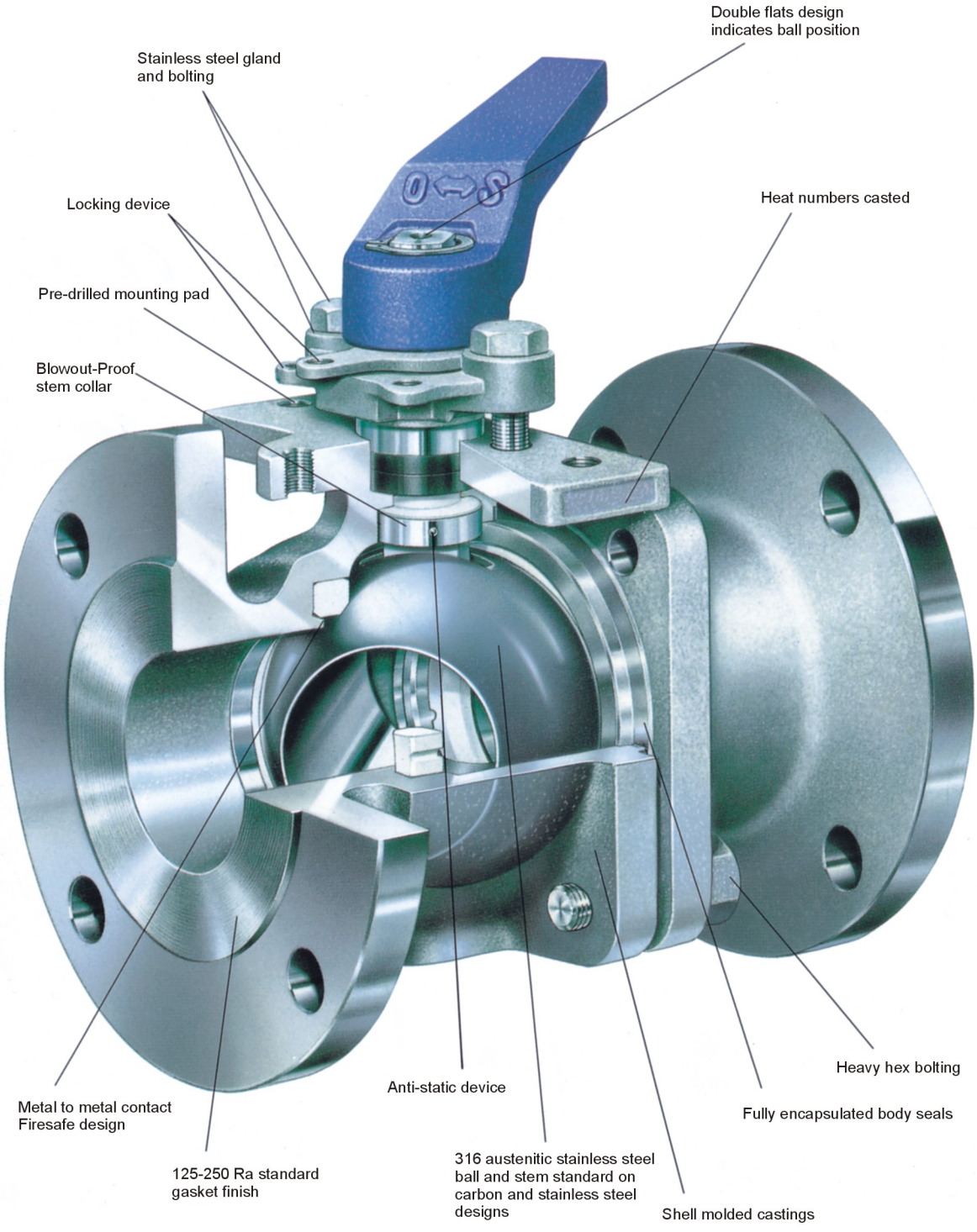

SERIES 2010 / 2030 / 2060 FULL BORE

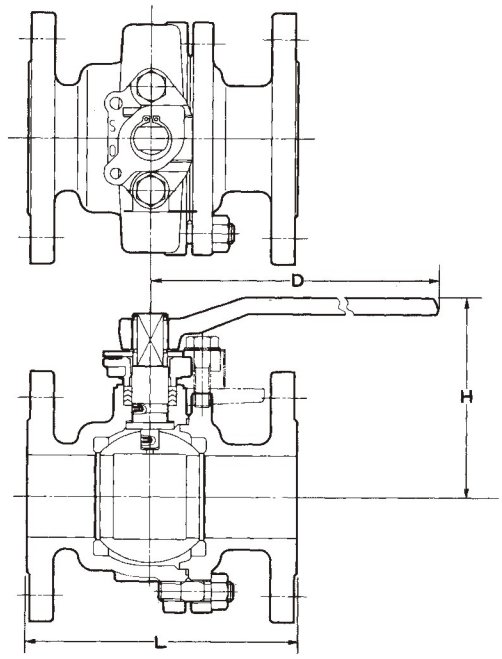

Dimensions of 2010-150# / JIS-10K

(UNIT=MM)

Valve Size	in	1/2	3/4	1	1.5	2	2.5	3	4	5	6	8	10	12	14
	mm	15	20	25	40	50	65	80	100	125	150	200	250	300	350
Bore	in	0.5	0.75	1	1.5	2	2.5	3	4	5	6	8	10	12	14
	mm	15	20	25	40	50	65	80	100	125	150	200	250	300	350
L	in	4.25	4.6	5.0	6.5	7.0	7.5	8.0	9.0	14.0	15.5	18.0	21.0	24.0	27.0
	mm	108	117	127	165	178	190	203	229	356	394	457	533	610	686
H	in	2.5	2.6	3.1	4.1	4.4	4.8	6.3	7.7	8.3	10.0	12.0	14.2	16.5	17.8
	mm	64.5	67.5	79.0	104	111	123	157	195	212	253	304	374	420	452
D	in	5.2	5.2	6.4	9.0	9.0	9.0	15.9	17.5	17.5	45.0	60.0	N/A	N/A	N/A
	mm	132	132	163	229	229	229	404	445	445	1143	1524	Gear	Gear	Gear

Dimensions of 2030-300# / JIS-20K

(UNIT=MM)

Valve Size	in	1/2	3/4	1	1.25	1.5	2	3	4	6	8	10	12
	mm	15	20	25	32	40	50	80	100	150	200	250	300
Bore	in	0.5	0.75	1	1.25	1.5	2	3	4	6	8	10	12
	mm	15	20	25	32	40	50	80	100	150	200	250	300
L	in	5.5	6.0	6.5	7.0	7.5	8.5	11.1	12.0	15.9	19.8	22.4	25.5
	mm	140	152	165	178	190	216	282	305	403	502	569	648
H	in	2.5	2.6	3.1	4.1	4.1	4.4	6.3	7.7	10.0	12.0	14.2	16.5
	mm	64.5	67.5	79	104	104	111	157	195	253	304	374	420
D	in	5.2	5.2	6.4	6.4	9.0	9.0	15.9	17.5	45.0	60.0	N/A	N/A
	mm	132	132	163	163	229	229	404	445	1143	1524	Gear	Gear

Dimensions of 2060-600# / JIS-40K

(UNIT=MM)

Valve Size	in	1/2	3/4	1	1.5	2	3	4	6
	mm	15	20	25	40	50	80	100	150
Bore	in	0.5	0.75	1	1.5	2	3	4	6
	mm	15	20	25	40	50	80	100	150
L	in	6.5	7.5	8.5	9.5	11.5	14.0	17.0	22.0
	mm	165	190	216	241	292	356	432	559
H	in	2.5	2.6	3.1	4.1	5.6	7.2	8.7	7.2
	mm	64.5	67.5	79.0	104	142	182	222	182
D	in	5.2	5.2	6.4	9.0	15.9	17.5	45.0	17.5
	mm	132	132	163	229	404	445	1143	445

DESCRIPTION	MATERIAL	
	CF8M	WCB
Body	ASTM A351 CF8M	ASTM A216 WCB
Closure	ASTM A351 CF8M	ASTM A216 WCB
Stem S/A	ASTM A276-316	ASTM A276-316
Ball	ASTM A351 CF8M	ASTM A351 CF8M
Seat	RPTFE / Peek	RPTFE / Peek
Stem Packing	PTFE / Graphite	PTFE / Graphite
Stem Bearing	PTFE / Graphite	PTFE / Graphite
Thrust Washer	PTFE / Graphite	PTFE / Graphite
Gland	ASTM A351 CF8	ASTM A351 CF8
Gland Bushing	PTFE / Graphite	PTFE / Graphite
Body Gasket	PTFE / Graphite	PTFE / Graphite
Body Stud	ASTM A193 B8	ASTM A193 B7
Body Nut	ASTM A194 8A or 8	ASTM A194 2H
Gland Bolt	Stainless Steel	Carbon Steel
Handle	Commercial	Ductile Iron
Lock Plate	Stainless Steel	Stainless Steel
Worm Gear	Commercial	Commercial

2-PC FULL BORE EXTENSION STEM BALL VALVES

- Long stem extension for assured stem seal and freezing prevention.
- Bolted joint of stem extension with valve body. No welding joint.
- Protection of stem alignment by means of two bearings built on top and bottom of stem extension.

Fig : Lever Operation

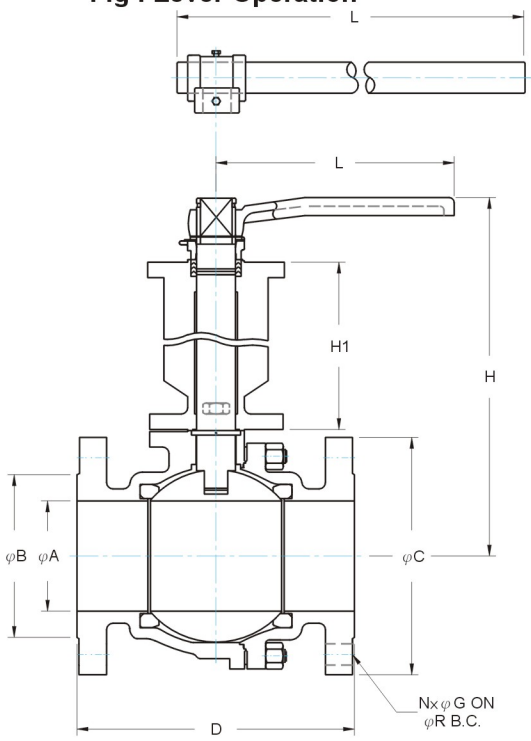

Valve Operator

1/2"~8": Lever operation
4"~12": Optional Gear operation

Full Bore

Fig : Gear Operation

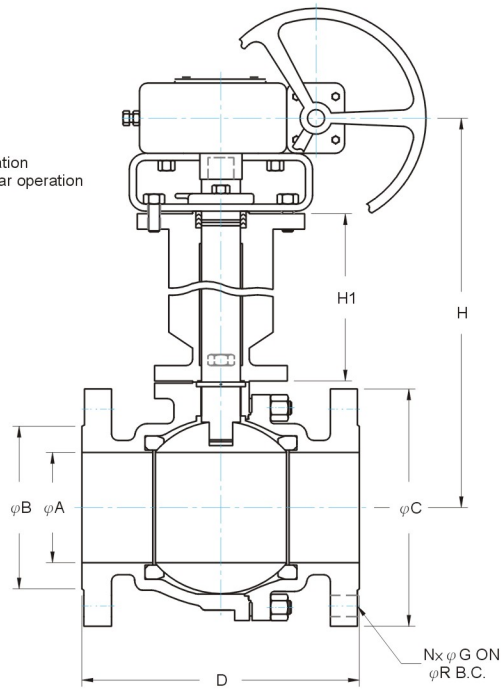

CLASS 150

Valve Size	Bore φA	APPROXIMATE DIMENSION IN MM								
		φB	φC	D	H	H1	N	φG	φR	L
1/2	15.0	35.0	89.0	108.0	164.5	100.0	4	16.0	60.5	132.0
3/4	20.0	43.0	98.0	117.0	167.5	100.0	4	16.0	70.0	132.0
1	25.0	51.0	108.0	127.0	179.0	100.0	4	16.0	79.2	163.0
1-1/2	40.0	73.0	127.0	165.0	204.0	100.0	4	16.0	98.5	229.0
2	50.0	92.0	152.0	177.8	211.0	100.0	4	19.0	120.5	229.0
3	80.0	127.0	190.0	203.2	257.0	100.0	4	19.0	152.5	404.0
4	100.0	157.0	229.0	228.6	295.0	100.0	8	19.0	190.5	445.0
6	150.0	216.0	279.0	393.7	453.0	200.0	8	22.0	241.5	1143.0
8	200.0	270.0	343.0	457.2	504.0	200.0	8	22.0	298.5	1524.0
10	250.0	324.0	406.0	533.4	574.0	200.0	12	25.0	362.0	GEAR
12	300.0	381.0	483.0	609.6	620.0	200.0	12	25.0	432.0	GEAR
14	350.0	413.0	433.4	685.8	652.0	200.0	12	28.0	476.5	GEAR

CLASS 300

Valve Size	Bore φA	APPROXIMATE DIMENSION IN MM								
		φB	φC	D	H	H1	N	φG	φR	L
1/2	15.0	35.0	95.0	140.0	164.5	100.0	4	16.0	66.5	132.0
3/4	20.0	43.0	117.0	152.0	167.5	100.0	4	19.0	82.5	132.0
1	25.0	51.0	124.0	165.0	179.0	100.0	4	19.0	89.0	163.0
1-1/2	40.0	73.0	156.0	190.0	204.0	100.0	4	22.0	114.5	229.0
2	50.0	92.0	165.0	215.9	211.0	100.0	8	19.0	127.0	229.0
3	80.0	127.0	210.0	282.7	257.0	100.0	8	22.0	168.0	404.0
4	100.0	157.0	254.0	304.8	295.0	100.0	8	22.0	200.0	445.0
6	150.0	216.0	318.0	403.4	453.0	200.0	12	22.0	270.0	1143.0
8	200.0	270.0	381.0	501.7	504.0	200.0	12	25.0	330.0	1524.0
10	250.0	324.0	444.0	568.5	574.0	200.0	16	29.0	387.5	GEAR
12	300.0	381.0	521.0	647.7	620.0	200.0	16	32.0	451.0	GEAR

MATERIAL LIST

ITEM	DESCRIPTION	MATERIAL	
		CF8M	WCB
1	Body	ASTM A351 CF8M	ASTM A216 WCB
2	Closure	ASTM A351 CF8M	ASTM A216 WCB
3	Ball	ASTM A351 CF8M	ASTM A351 CF8M
4	Stem S/A	ASTM A276-316	ASTM A276-316
5	Gland	ASTM A351 CF8	ASTM A351 CF8
6	Seat	RPTFE / Peek	RPTFE / Peek
7	Stem Packing	PTFE / Graphite	PTFE / Graphite
8	Stem Bearing	PTFE / Graphite	PTFE / Graphite
9	Thrust Washer	PTFE / Graphite	PTFE / Graphite
10	Gland Bushing	PTFE / Graphite	PTFE / Graphite
11	Body Gasket	PTFE / Graphite	PTFE / Graphite
12	Lock Plate	Stainless Steel	Stainless Steel
13	Gland Bolt	Stainless Steel	Carbon Steel
14	Body Stud	ASTM A193 B8	ASTM A193 B7
15	Body Nut	ASTM A194 8A or 8	ASTM A194 2H
16	Extension Pipe	Stainless Steel	Carbon Steel
17	Extension Gasket	PTFE / Graphite	PTFE / Graphite
18	Screw,Extension	Stainless Steel	Carbon Steel
19	Cap Screw,Gear	Stainless Steel	Carbon Steel
20	Worm Gear	Commercial	Commercial
21	Handle Wheel	Carbon Steel	Carbon Steel
22	Handle Adapter	Ductile Iron	Ductile Iron
23	Handle	Ductile Iron	Ductile Iron

2-PC FULL BORE TRUNNION TYPE BALL VALVES

Fig : Lever Operation

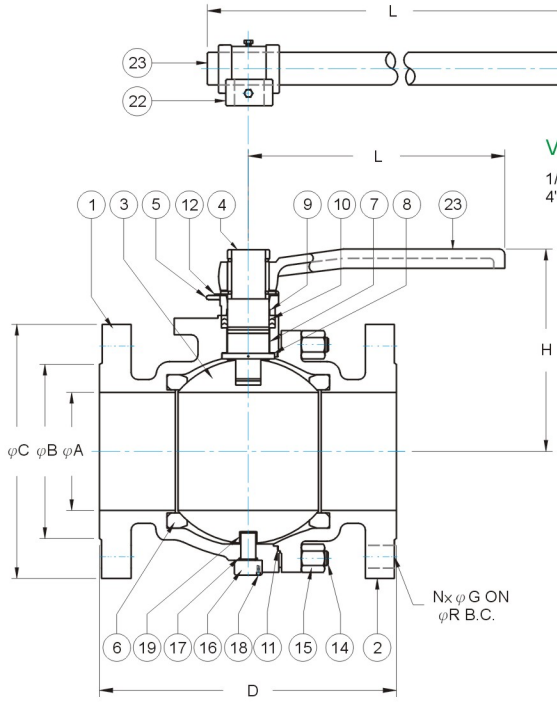

Fig : Gear Operation

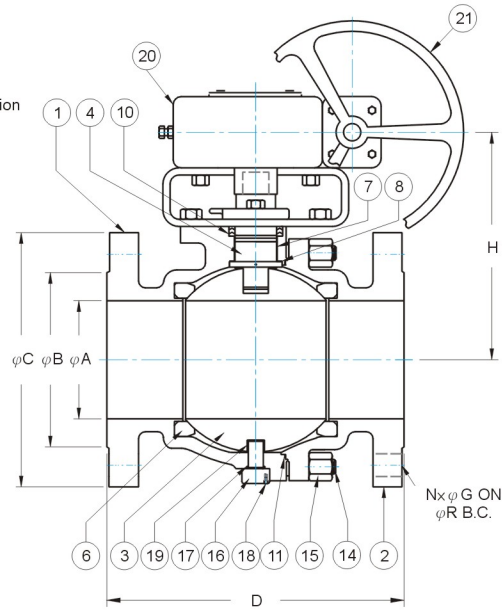

Valve Operator

1/2"~8": Lever operation
4"~14": Optional Gear operation

Full Bore

CLASS 150

Valve Size	Bore φA	APPROXIMATE DIMENSION IN MM						
		φB	φC	D	H	N	φG	φR	L
1/2	15.0	35.0	89.0	108.0	64.5	4	16.0	60.5	132.0
3/4	20.0	43.0	98.0	117.0	67.5	4	16.0	70.0	132.0
1	25.0	51.0	108.0	127.0	79.0	4	16.0	79.2	163.0
1-1/2	40.0	73.0	127.0	165.0	104.0	4	16.0	98.5	229.0
2	50.0	92.0	152.0	177.8	111.0	4	19.0	120.5	229.0
3	80.0	127.0	190.0	203.2	157.0	4	19.0	152.5	404.0
4	100.0	157.0	229.0	228.6	195.0	8	19.0	190.5	445.0
6	150.0	216.0	279.0	393.7	253.0	8	22.0	241.5	1143.0
8	200.0	270.0	343.0	457.2	304.0	8	22.0	298.5	1524.0
10	250.0	324.0	406.0	533.4	374.0	12	25.0	362.0	GEAR
12	300.0	381.0	483.0	609.6	420.0	12	25.0	432.0	GEAR
14	350.0	413.0	533.4	685.8	452.0	12	28.0	476.5	GEAR

CLASS 300

Valve Size	Bore φA	APPROXIMATE DIMENSION IN MM						
		φB	φC	D	H	N	φG	φR	L
1/2	15.0	35.0	95.0	140.0	203.0	4	16.0	66.5	132.0
3/4	20.0	43.0	117.0	152.0	206.0	4	19.0	82.5	132.0
1	25.0	51.0	124.0	165.0	229.0	4	19.0	89.0	163.0
1-1/2	40.0	73.0	156.0	190.0	274.0	4	22.0	114.5	229.0
2	50.0	92.0	165.0	215.9	281.0	8	19.0	127.0	229.0
3	80.0	127.0	210.0	282.7	350.0	8	22.0	168.0	404.0
4	100.0	157.0	254.0	304.8	415.0	8	22.0	200.0	445.0
6	150.0	216.0	318.0	403.4	495.0	12	22.0	270.0	1143.0
8	200.0	270.0	381.0	501.7	524.0	12	25.0	330.0	1524.0
10	250.0	324.0	444.0	568.5	580.0	16	29.0	387.5	GEAR
12	300.0	381.0	521.0	647.7	480.0	16	32.0	451.0	GEAR

MATERIAL LIST

ITEM	DESCRIPTION	MATERIAL	
		CF8M	WCB
1	Body	ASTM A351 CF8M	ASTM A216 WCB
2	Closure	ASTM A351 CF8M	ASTM A216 WCB
3	Ball	ASTM A351 CF8M	ASTM A351 CF8M
4	Stem S/A	ASTM A276-316	ASTM A276-316
5	Gland	ASTM A351 CF8	ASTM A351 CF8
6	Seat	RPTFE / Peek	RPTFE / Peek
7	Stem Packing	PTFE / Graphite	PTFE / Graphite
8	Stem Bearing	PTFE / Graphite	PTFE / Graphite
9	Thrust Washer	PTFE / Graphite	PTFE / Graphite
10	Gland Bushing	PTFE / Graphite	PTFE / Graphite
11	Body Gasket	PTFE / Graphite	PTFE / Graphite
12	Lock Plate	Stainless Steel	Stainless Steel
13	Gland Bolt	Stainless Steel	Carbon Steel
14	Body Stud	ASTM A193 B8	ASTM A193 B7
15	Body Nut	ASTM A194 8A or 8	ASTM A194 2H
16	Retainer	Stainless Steel	Carbon Steel
17	Retainer Gasket	PTFE / Graphite	PTFE / Graphite
18	Cap Screw,Retainer	Stainless Steel	Carbon Steel
19	Bearing,Ball	Du Dry Bearing	Du Dry Bearing
20	Worm Gear	Commercial	Commercial
21	Handle Wheel	Carbon Steel	Carbon Steel
22	Handle Adapter	Ductile Iron	Ductile Iron
23	Handle	Ductile Iron	Ductile Iron

Pressure / Temperature Ratings

The pressure / temperature ratings for **ZV**'s flanged floating ball valves are determined by both the ANSI Class for the valve shell and the seat and seal materials used. The charts below are indicative of the standard seat materials.

1/2" & 3/4" 2010/2030
1/2" to 1" 1010/1030

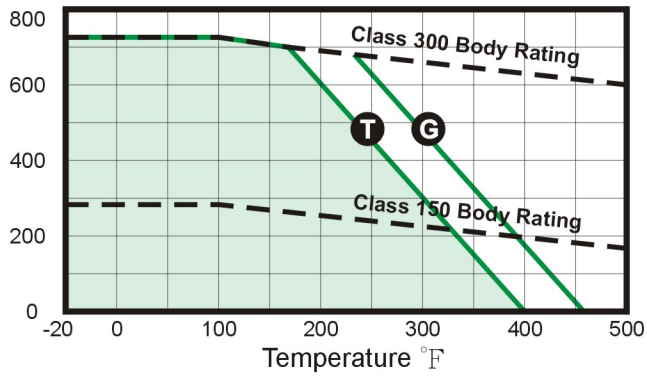

6" 2010/2030
6" & 8" 1010/1030

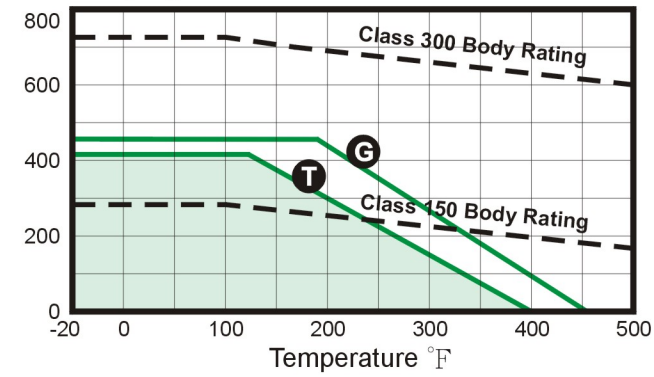

1" to 2" 2010/2030
1-1/2" to 3" 1010/1030

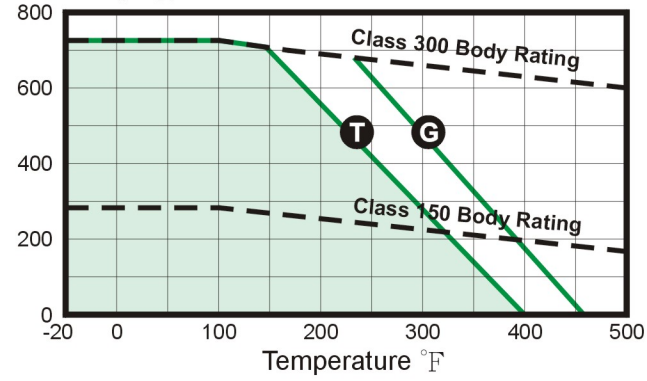

8" & 10" 2010/2030
10" 1010/1030

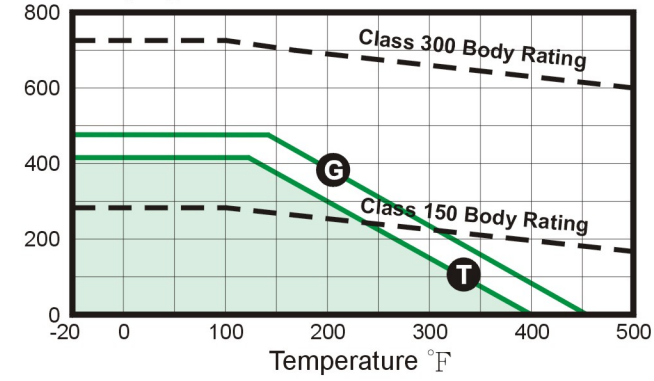

3" & 4" 2010/2030
4" 1010/1030

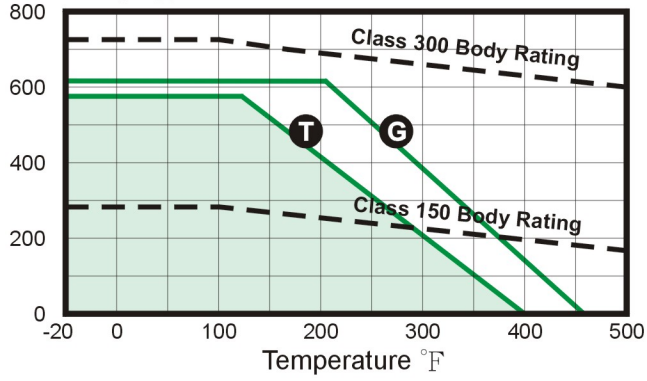

1/2" ~ 3" 2060

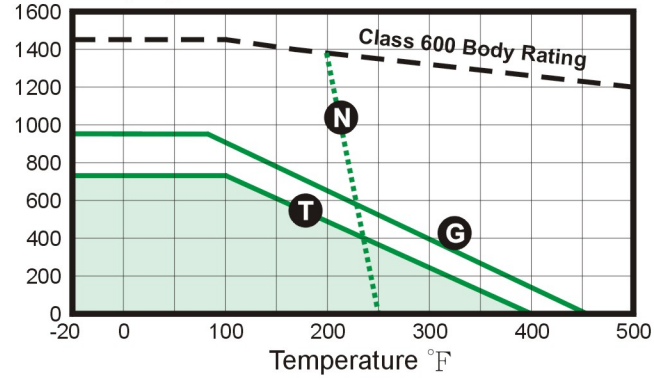

T Virgin TFE **G** Glass Filled TFE **N** Nylon

Dimensions of Actuator Mounting Pads for Two-piece, Class 150/300#, JIS10/20K, Full Bore Split Body Design Ball Valves

d1:Pads are drilled.

d2:Pads can be drilled as an option.

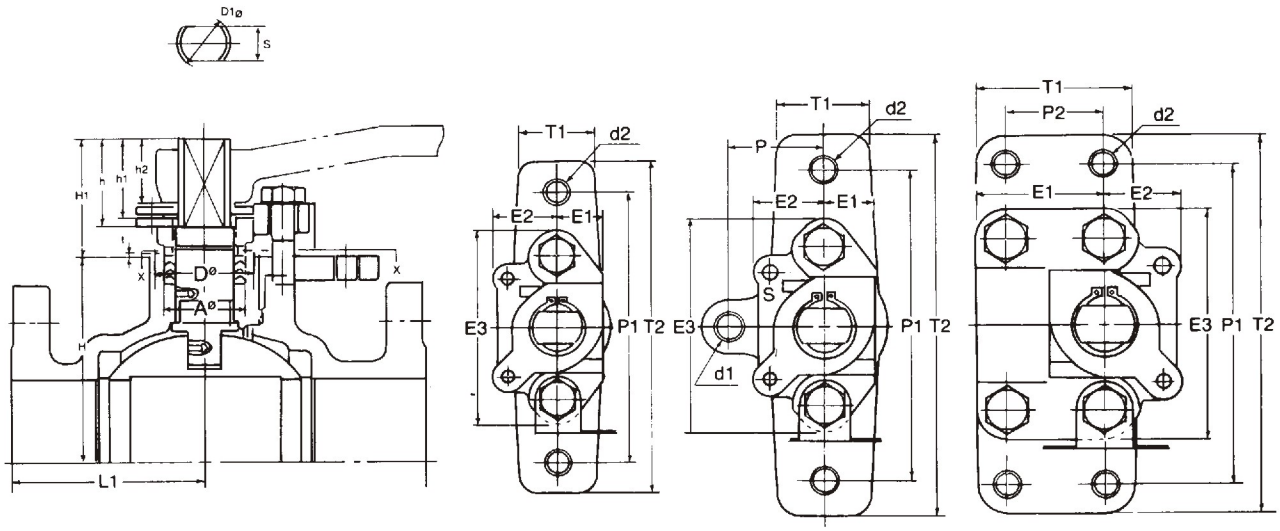

for 1/2 " to 2 " for 3 " or 4 " for 6 "to 10 "

Nominal Size	H	H1	D φ (-0.1 -0.2)	t	h	h1	h2	s (-0.05 -0.10)	D1 φ (0 -0.2)	P	P1	P2	A φ	L1* (1)	L1* (2)	L1* (3)	L1* (4)	E1	E2	E3	T1	T2	d2 M thread	d2 UNC thread
1/2	33	31.5	24	2	23	19	14	8	12	-	72	-	19	42	43	58	57	15	20	55	21	92	M6	1/4-20 UNC
3/4	36	31.5	24	2	23	19	14	8	12	-	72	-	19	47	46	64.5	61	15	20	55	21	92	M6	1/4-20 UNC
1	43	36	30	2	25	22.5	16.5	10	15	-	90	-	24	50	52	69	68	19	23	68	25	110	M8	5/16-18 UNC
1-1/2	59	45.5	40	2	32	26.5	22	14	21	-	114	-	32	67	67	79.5	80	25	26	85	34	138	M10	3/8-16 UNC
2	66	45.5	40	2	32	26.5	22	14	21	-	114	-	32	74	77	93	85	25	26	85	34	138	M10	3/8-16 UNC
3	100	57	48	2	42	36.5	30.5	17	26	42	134	-	40	95	100	135	125	24	33.5	101	41.5	160	M12	7/16-14 UNC
4	123	72	58	2	54	47	40.5	23	35	54	160	-	50	110	112.5	148	130	32	40	122	50	192	M16	5/8-11 UNC
6	168	85	70	2	67	58	51	27	40	-	174	55	58	197	197	201.5	190	73	45.5	134	91	210	M16	5/8-11 UNC
8	208	96	78	2	74	65.5	58	32	48	-	184	60	66	228.5	228.5	251	251	78	49	143	96	220	M16	5/8-11 UNC
10	268	106	92	2	82	73	66.5	40	58	-	216	75	78	266.5	266.5	-	-	96	57	167	117	258	M20	3/4-10 UNC

ZV Floating Ball Valve Series 1010/1030 Standard Bore

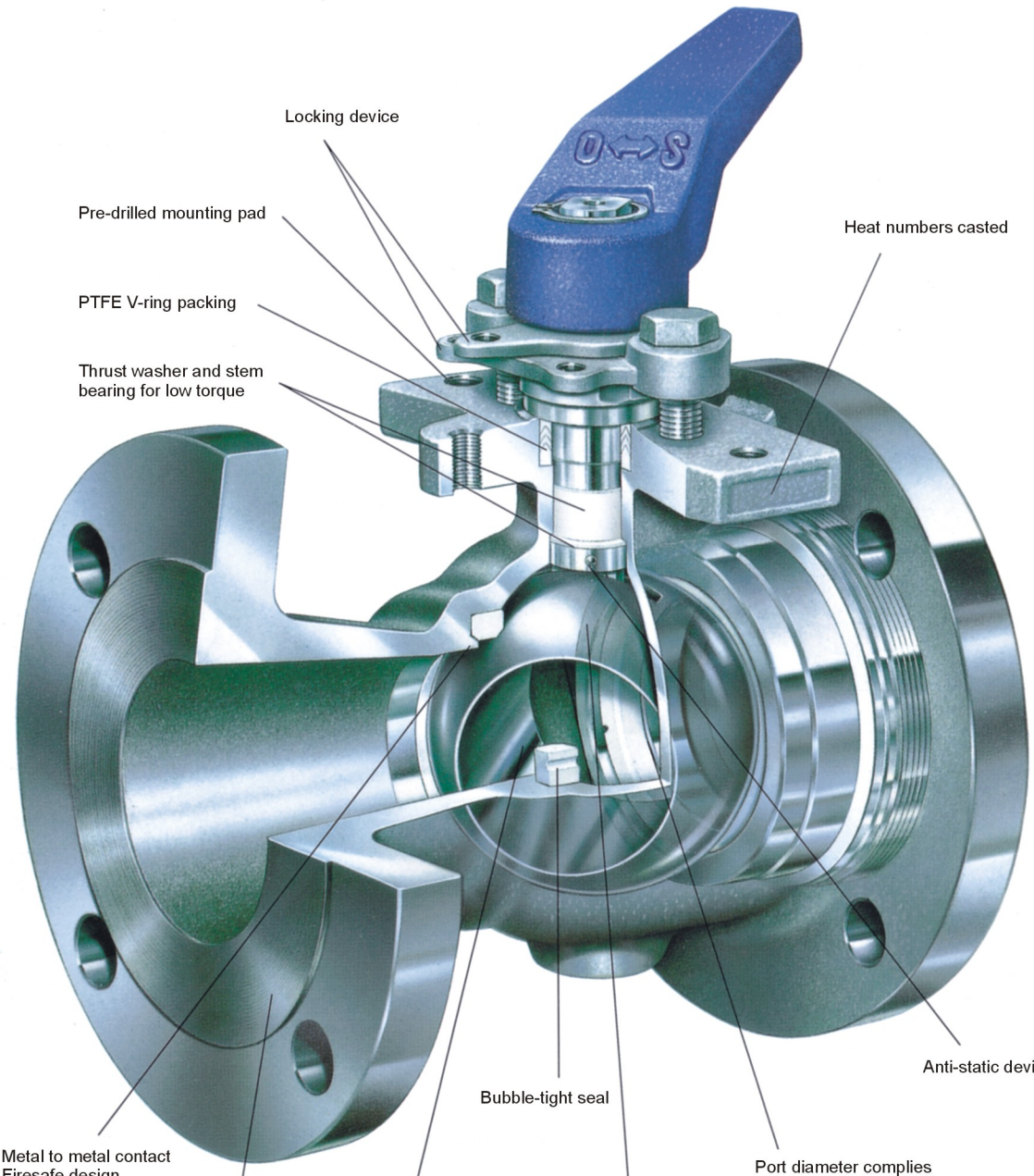

SERIES 1010 / 1030 / 1060 STANDARD BORE

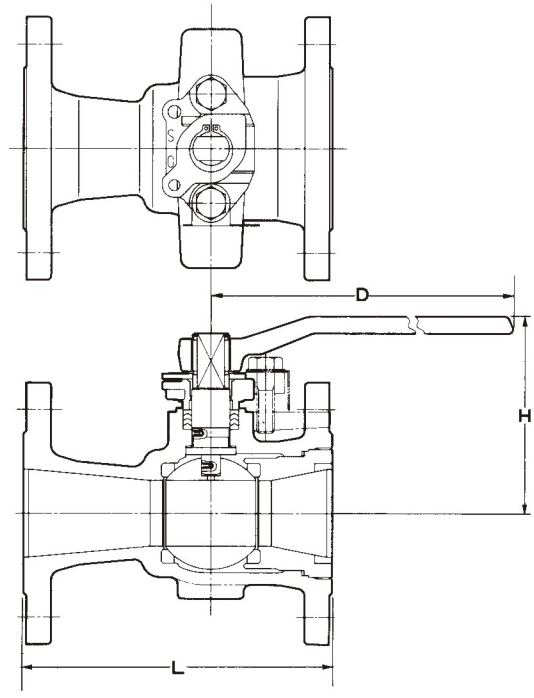

Dimensions of 1010-150# / JIS-10K

(UNIT=MM)

Valve Size	in	3/4	1	1.5	2	3	4	6	8	10	12
	mm	20	25	40	50	80	100	150	200	250	300
Bore	in	0.6	0.8	1.2	1.5	2.3	3.0	4.5	5.9	7.3	8.9
	mm	15	20	30	38	58	76	114	151	186	227
L	in	4.6	5.0	6.5	7.0	8.0	9.0	10.2	11.5	13.0	14.0
	mm	117	127	165	178	203	229	267	292	330	356
H	in	2.3	2.6	3.3	4.1	5.6	6.3	8.2	9.9	11.4	13.1
	mm	59	66	84	104	142	160	208	252	289	334
D	in	5.2	5.2	6.4	9.0	15.9	17.5	45.0	60.0	N/A	N/A
	mm	132	132	163	229	404	404	445	1143	1524	Gear

Dimensions of 1030-300# / JIS-20K

(UNIT=MM)

Valve Size	in	1	1.5	2	3	4	6	8
	mm	25	4.0	50	80	102	152	203
Bore	in	0.8	1.2	1.5	2.3	3.0	4.5	6.0
	mm	20	30	38	58	76	114	152
L	in	6.5	7.5	8.5	11.1	12.0	15.9	16.5
	mm	165	190	216	282	305	403	419
H	in	2.6	3.3	4.1	5.6	6.3	8.2	9.9
	mm	66	84	104	142	160	208	252
D	in	5.2	6.4	9.0	15.9	17.5	45.0	60.0
	mm	132	163	229	404	404	445	1143

Dimensions of 1060-600# / JIS-40K

(UNIT=MM)

Valve Size	in	2	3	4	6
	mm	50	80	100	150
Bore	in	1.6	2.1	3.0	4.0
	mm	40	53	76	102
L	in	11.5	14.0	17.0	22.0
	mm	292	356	432	559
H	in	4.1	5.6	7.2	7.2
	mm	104	142	182	182
D	in	9.0	15.9	17.5	17.5
	mm	229	404	445	445

DESCRIPTION	MATERIAL	
	CF8M	WCB
Body	ASTM A351 CF8M	ASTM A216 WCB
Insert	ASTM A351 CF8M	ASTM A216 WCB
Stem S/A	ASTM A276-316	ASTM A276-316
Ball	ASTM A351 CF8M	ASTM A351 CF8M
Seat	RPTFE / Peek	RPTFE / Peek
Stem Packing	PTFE / Graphite	PTFE / Graphite
Stem Bearing	PTFE / Graphite	PTFE / Graphite
Thrust Washer	PTFE / Graphite	PTFE / Graphite
Gland	ASTM A351 CF8	ASTM A351 CF8
Gland Bushing	PTFE / Graphite	PTFE / Graphite
Body Gasket	PTFE / Graphite	PTFE / Graphite
Gland Bolt	Stainless Steel	Carbon Steel
Handle	Ductile Iron	Ductile Iron
Lock Plate	Stainless Steel	Stainless Steel
Worm Gear	Commercial	Commercial

1-PC STANDARD BORE EXTENSION STEM BALL VALVES

- Long stem extension for assured stem seal and freezing prevention.
- Bolted joint of stem extension with valve body. No welding joint.
- Protection of stem alignment by means of two bearings built on top and bottom of stem extension.

Fig : Lever Operation **Fig : Gear Operation**

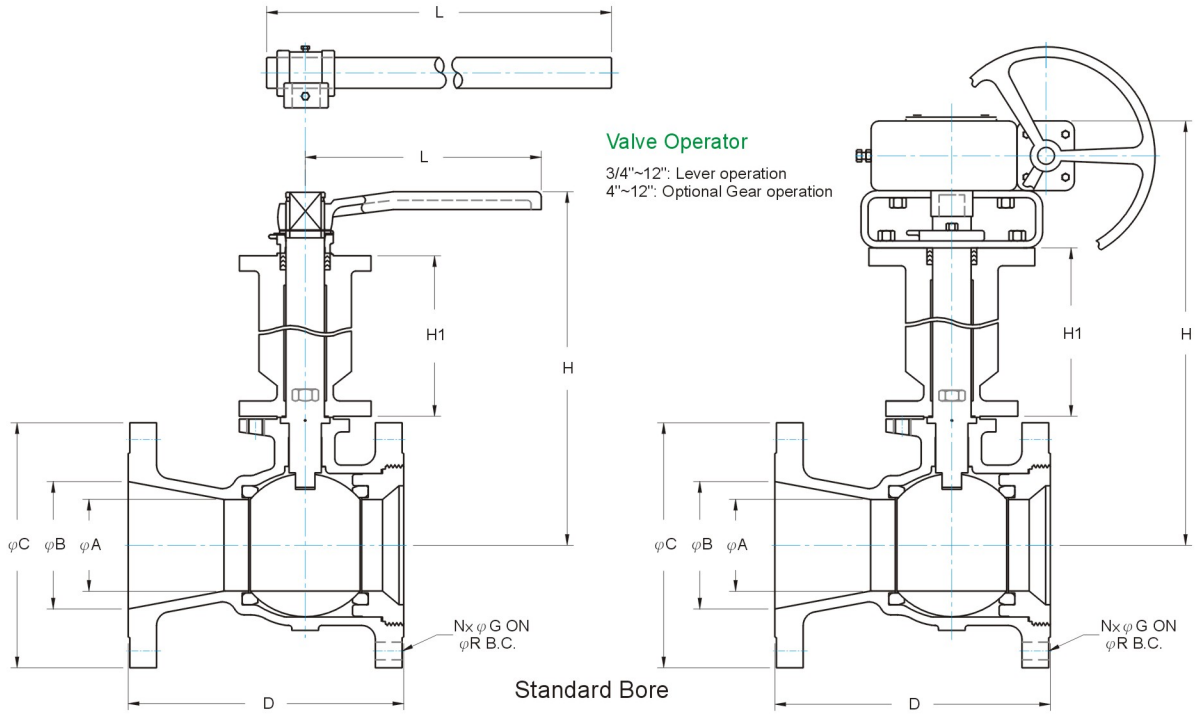

CLASS 150

Valve Size	Bore φA	APPROXIMATE DIMENSION IN MM								
		φB	φC	D	H	H1	N	φG	φR	L
3/4	15.0	20.0	98.5	117.0	159.0	100.0	4	16.0	70.0	132.0
1	20.0	25.0	108.0	127.0	166.0	100.0	4	16.0	79.2	132.0
1-1/2	30.0	38.0	127.0	165.0	184.0	100.0	4	16.0	98.5	165.0
2	38.0	50.0	152.4	177.8	204.0	100.0	4	19.0	120.6	229.0
3	58.0	76.0	190.0	203.0	342.0	200.0	4	19.0	152.5	404.0
4	76.0	102.0	228.6	229.0	360.0	200.0	8	19.0	190.5	404.0
6	114.0	152.0	279.0	267.0	408.0	200.0	8	22.0	241.5	445.0
8	151.0	203.0	343.0	292.0	452.0	200.0	8	22.0	298.5	1143
10	186.0	254.0	406.0	330.0	489.0	200.0	12	25.0	362.0	1524
12	227.0	302.0	483.0	356.0	534.0	200.0	12	25.0	431.8	GEAR

CLASS 300

Valve Size	Bore φA	APPROXIMATE DIMENSION IN MM								
		φB	φC	D	H	H1	N	φG	φR	L
1	20.0	25.0	124.0	165.0	166.0	100.0	4	19.0	89.0	132.0
1-1/2	30.0	38.0	155.0	190.5	184.0	100.0	4	22.0	114.5	163.0
2	38.0	50.0	165.0	216.0	204.0	100.0	8	19.0	127.0	229.0
3	58.0	76.0	209.6	282.6	342.0	200.0	8	22.0	168.0	404.0
4	76.0	102.0	254.0	304.8	360.0	200.0	8	22.0	200.0	404.0
6	114.0	152.0	318.0	403.3	408.0	200.0	12	22.0	270.0	445.0
8	152.0	203.0	381.0	419.1	452.0	200.0	12	25.0	330.0	1143

MATERIAL LIST

ITEM	DESCRIPTION	MATERIAL	
		CF8M	WCB
1	Body	ASTM A351 CF8M	ASTM A216 WCB
2	Insert	ASTM A351 CF8M	ASTM A216 WCB
3	Ball	ASTM A351 CF8M	ASTM A351 CF8M
4	Extension Stem	ASTM A276-316	ASTM A276-316
5	Gland	ASTM A351 CF8	ASTM A351 CF8
6	Seat	RPTFE / Peek	RPTFE / Peek
7	Stem Bearing	PTFE / Graphite	PTFE / Graphite
8	Thrust Washer	PTFE / Graphite	PTFE / Graphite
9	Gland Bushing	PTFE / Graphite	PTFE / Graphite
10	Stem Packing	PTFE / Graphite	PTFE / Graphite
11	Body Gasket	PTFE / Graphite	PTFE / Graphite
12	Extension Gasket	PTFE / Graphite	PTFE / Graphite
13	Lock Plate	Stainless Steel	Stainless Steel
14	Extension Bolt	Stainless Steel	Carbon Steel
15	Gland Bolt	Stainless Steel	Carbon Steel
16	Mounting Pad	Stainless Steel	Carbon Steel
17	Worm Gear	Commercial	Commercial
18	Handle Wheel	Ductile Iron	Ductile Iron
19	Handle Adapter	Ductile Iron	Ductile Iron
20	Handle	Ductile Iron	Ductile Iron

1-PC STANDARD BORE JACKETED BALL VALVES

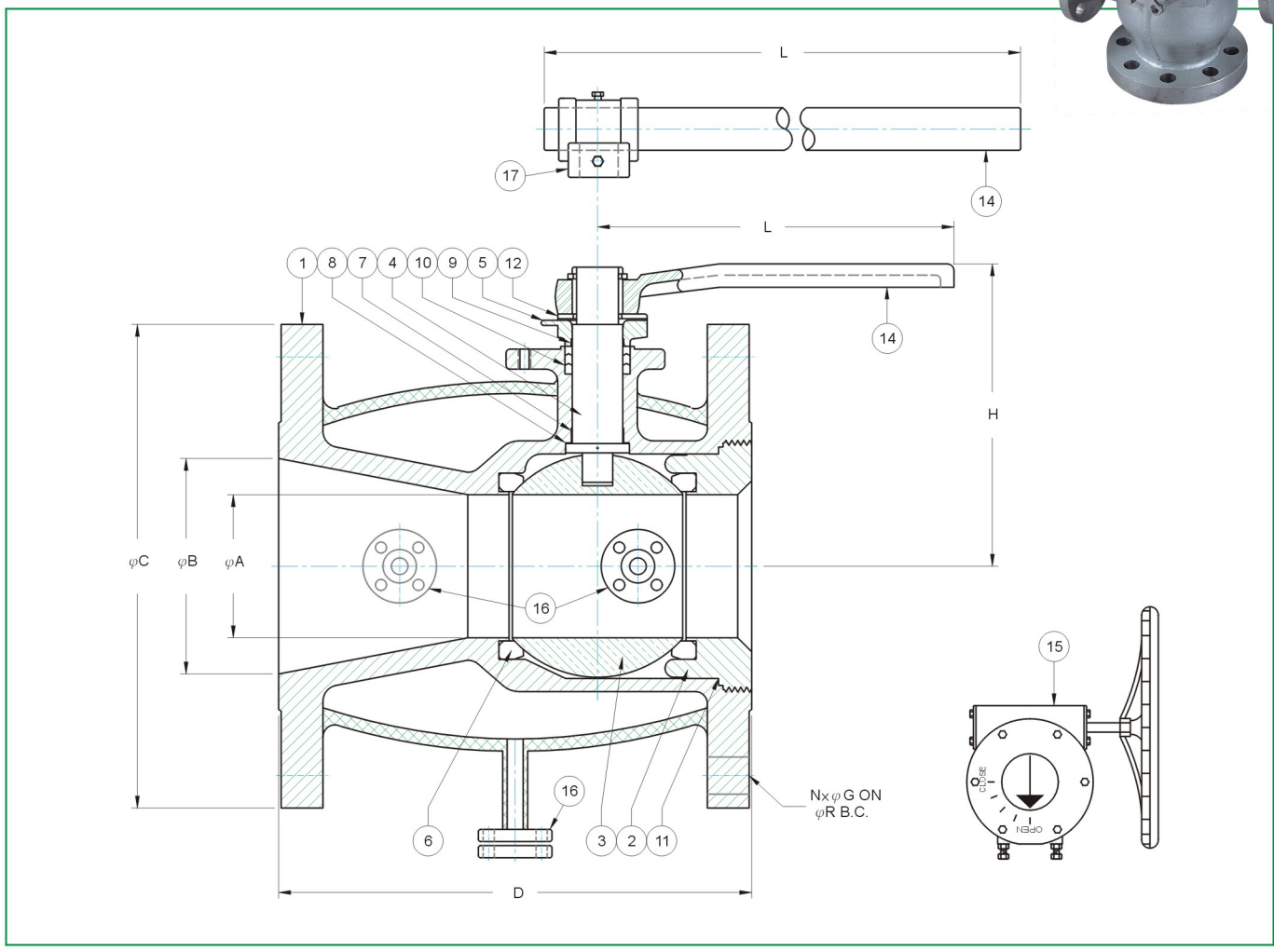

CLASS 150

Valve Size	Bore φA	APPROXIMATE DIMENSION IN MM							
		φB	φC	D	H	N	φG	φR	L
3/4	15.0	20.0	98.0	117.0	59.0	4	16.0	70.0	132.0
1	20.0	25.0	108.0	127.0	66.0	4	16.0	79.2	132.0
1-1/2	30.0	38.0	127.0	165.0	84.0	4	16.0	98.5	163.0
2	38.0	50.0	152.0	177.8	104.0	4	19.0	120.6	229.0
3	58.0	76.0	190.0	203.0	142.0	4	19.0	152.5	404.0
4	76.0	102.0	229.0	229.0	160.0	8	19.0	190.5	404.0
6	114.0	152.0	279.0	267.0	208.0	8	22.0	241.5	445.0
8	151.0	203.0	343.0	292.0	252.0	8	22.0	298.5	1143
10	186.0	254.0	406.0	330.0	289.0	12	25.0	362.0	1524

∗JACKET CONNECTOR : 1/2"-150# FLANGE

CLASS 300

Valve Size	Bore φA	APPROXIMATE DIMENSION IN MM							
		φB	φC	D	H	N	φG	φR	L
1-1/2	30.0	38.0	155.0	190.5	84.0	4	22.0	114.5	163.0
2	38.0	50.0	165.0	216.0	104.0	8	19.0	127.0	229.0
3	58.0	76.0	210.0	282.6	142.0	8	22.0	168.0	404.0
4	76.0	102.0	254.0	304.8	160.0	8	22.0	200.0	404.0
6	114.0	152.0	318.0	403.3	208.0	12	22.0	270.0	445.0
8	152.0	203.0	381.0	419.1	252.0	12	25.0	330.0	1143

MATERIAL LIST

ITEM	DESCRIPTION	MATERIAL
1	Body	ASTM A351 CF8M
2	Insert	ASTM A351 CF8M
3	Ball	ASTM A351 CF8M
4	Stem S/A	ASTM A276-316
5	Gland	ASTM A351 CF8
6	Seat	RPTFE / Peek
7	Stem Bearing	PTFE / Graphite
8	Thrust Washer	PTFE / Graphite
9	Gland Bushing	PTFE / Graphite
10	Stem Packing	PTFE / Graphite
11	Body Gasket	PTFE / Graphite
12	Lock Plate	Stainless Steel
13	Gland Bolt	Stainless Steel
14	Handle	Ductile Iron
15	Worm Gear	Commercial
16	Jacket Connector	ASTM A351 CF8M
17	Handle Adapter	Ductile Iron

1-PC STANDARD BORE 3WAY BALL VALVES

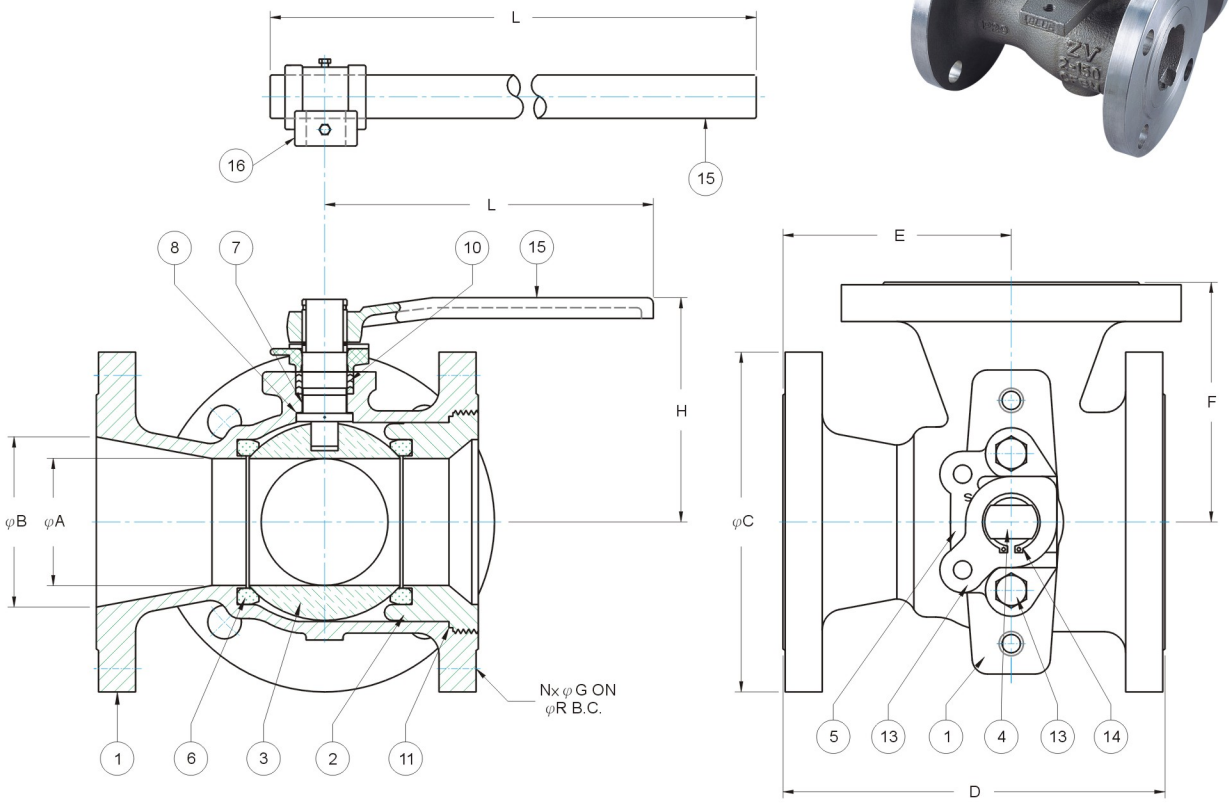

FLOW PATTERN FOR L-PORT

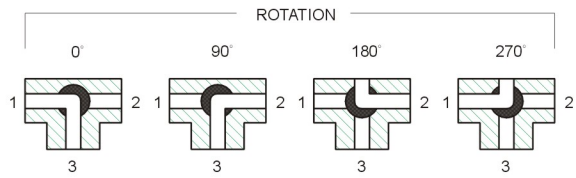

FLOW PATTERN FOR T-PORT

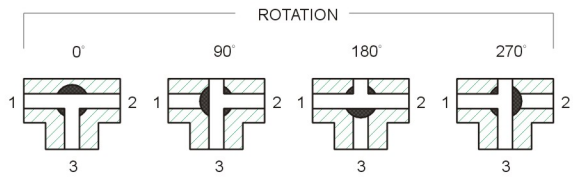

CLASS 150

Valve Size	Bore φA	APPROXIMATE DIMENSION IN MM									
		φB	φC	D	E	F	H	N	φG	φR	L
2	38.0	50.0	152.4	177.8	108.0	120.0	104.0	4	19.0	120.5	229.0
3	58.0	76.0	190.0	203.0	128.0	160.0	142.0	4	19.0	152.5	404.0
4	76.0	102.0	228.6	229.0	144.0	180.0	160.0	8	19.0	190.5	404.0
6	114.0	152.0	279.0	267.0	160.3	220.0	208.0	8	22.0	241.5	445.0
8	151.0	203.0	343.0	292.0	165.5	270.0	252.0	8	22.0	298.5	1143
10	186.0	254.0	406.0	330.0	164.9	320.0	289.0	12	25.0	362.0	1524
12	227.0	302.0	483.0	356.0	185.5	360.0	334.0	12	25.0	431.8	GEAR

CLASS 300

Valve Size	Bore φA	APPROXIMATE DIMENSION IN MM									
		φB	φC	D	E	F	H	N	φG	φR	L
2	38.0	50.8	165.1	216.0	141.1	140.0	104.0	8	19.0	127.0	229.0
3	58.0	76.0	209.6	282.6	192.6	180.0	142.0	8	22.0	168.1	404.0
4	76.0	102.0	254.0	304.8	204.8	210.0	160.0	8	22.0	200.1	404.0
6	114.0	152.0	318.0	403.3	228.4	250.0	208.0	12	22.0	270.0	445.0
8	152.0	203.0	381.0	419.1	260.0	290.0	252.0	12	25.0	330.0	1143

MATERIAL LIST

ITEM	DESCRIPTION	MATERIAL	
		CF8M	WCB
1	Body	ASTM A351 CF8M	ASTM A216 WCB
2	Insert	ASTM A351 CF8M	ASTM A216 WCB
3	Ball	ASTM A351 CF8M	ASTM A351 CF8M
4	Stem S/A	ASTM A276-316	ASTM A276-316
5	Gland	ASTM A351 CF8	ASTM A351 CF8
6	Seat	RPTFE / Peek	RPTFE / Peek
7	Stem Bearing	PTFE / Graphite	PTFE / Graphite
8	Thrust Washer	PTFE / Graphite	PTFE / Graphite
9	Gland Bushing	PTFE / Graphite	PTFE / Graphite
10	Stem Packing	PTFE / Graphite	PTFE / Graphite
11	Body Gasket	PTFE / Graphite	PTFE / Graphite
12	Lock Plate	Stainless Steel	Stainless Steel
13	Gland Bolt	Stainless Steel	Carbon Steel
14	Snap Ring	Stainless Steel	Stainless Steel
15	Handle	Ductile Iron	Ductile Iron
16	Handle Adapter	Ductile Iron	Ductile Iron

ANSI B 16.5-1981
ANSI CLASS 150 RF, JIS-10K

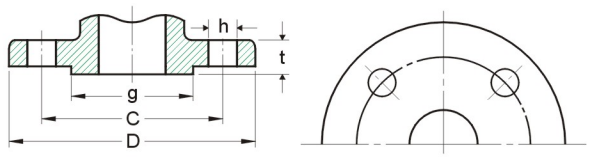

Class 150 steel pipe flange dimensions

Nominal Size		D		C		g		t		(h)Bolt hole		Bolt	
in	mm	in	mm	in	mm	in	mm	in	mm	in	mm	Number	Diam.
1/2	15	3.50	89	2.38	60.5	1.38	35	0.44	11.2	0.62	16	4	1/2
3/4	20	3.88	98	2.75	70.0	1.69	43	0.44	11.2	0.62	16	4	1/2
1	25	4.25	108	3.12	79.2	2.00	51	0.44	11.2	0.62	16	4	1/2
1-1/4	32	4.62	117	3.50	89.0	2.50	64	0.50	12.7	0.62	16	4	1/2
1-1/2	40	5.00	127	3.88	98.5	2.88	73	0.56	14.3	0.62	16	4	1/2
2	50	6.00	152	4.75	120.6	3.62	92	0.62	15.9	0.75	19	4	5/8
2-1/2	65	7.00	178	5.50	139.5	4.12	105	0.69	17.5	0.75	19	4	5/8
3	80	7.50	190	6.00	152.5	5.00	127	0.75	19.1	0.75	19	4	5/8
4	100	9.00	229	7.50	190.5	6.19	157	0.94	23.9	0.75	19	8	5/8
5	125	10.00	254	8.50	216.0	7.28	185	0.94	23.9	0.88	22	8	3/4
6	150	11.00	279	9.50	241.5	8.50	216	1.00	25.4	0.88	22	8	3/4
8	200	13.50	343	11.75	298.5	10.62	270	1.12	28.6	0.88	22	8	3/4
10	250	16.00	406	14.25	362.0	12.75	324	1.19	30.2	1.00	25	12	7/8
12	300	19.00	483	17.00	432.0	15.00	381	1.25	31.8	1.00	25	12	7/8
14	350	21.00	533	18.75	476.5	16.25	413	1.38	35.0	1.12	29	12	1
16	400	23.50	597	21.25	539.5	18.50	470	1.44	36.6	1.12	29	16	1
18	450	25.00	635	22.75	578.0	21.00	533	1.56	39.7	1.25	32	16	1-1/8
20	500	27.50	698	25.00	635.0	23.00	584	1.69	42.9	1.25	32	20	1-1/8
24	600	32.00	813	29.50	749.5	27.25	692	1.88	47.7	1.38	35	20	1-1/4

Height of raised face is 0.06 inch (1.6 mm) each.

JIS-10K steel pipe flange dimensions

Nominal Size		D		C		g		t		(h)Bolt hole		Bolt	
in	mm	in	mm	in	mm	in	mm	in	mm	in	mm	Number	Diam.
1/2	15	3.74	95	2.76	70	2.05	52	0.47	12	0.59	15	4	M12
3/4	20	3.94	100	2.95	75	2.28	58	0.55	14	0.59	15	4	M12
1	25	4.92	125	3.54	90	2.76	70	0.55	14	0.75	19	4	M16
1-1/4	32	5.31	135	3.94	100	3.15	80	0.63	16	0.75	19	4	M16
1-1/2	40	5.51	140	4.13	105	3.35	85	0.63	16	0.75	19	4	M16
2	50	6.10	155	4.72	120	3.94	100	0.63	16	0.75	19	4	M16
2-1/2	65	6.89	175	5.51	140	4.72	120	0.71	18	0.75	19	4	M16
3	80	7.28	185	5.91	150	5.12	130	0.71	18	0.75	19	8	M16
4	100	8.27	210	6.89	175	6.10	155	0.71	18	0.75	19	8	M16
5	125	9.84	250	8.27	210	7.28	185	0.79	20	0.91	23	8	M20
6	150	11.02	280	9.45	240	8.46	215	0.87	22	0.91	23	8	M20
8	200	12.99	330	11.42	290	10.43	265	0.87	22	0.91	23	12	M20
10	250	15.75	400	13.98	355	12.76	325	0.95	24	1.00	25	12	M22
12	300	17.52	445	15.75	400	14.57	370	0.95	24	1.00	25	16	M22
14	350	19.29	490	17.52	445	16.34	415	1.02	26	0.98	25	16	M22
16	400	22.05	560	20.08	510	18.70	475	1.10	28	1.06	27	16	M24
18	450	24.41	620	22.24	565	20.87	530	1.18	30	1.06	27	20	M24
20	500	26.57	675	24.41	620	23.03	585	1.18	30	1.06	27	20	M24
24	600	31.30	795	28.74	730	27.17	690	1.26	32	1.30	33	24	M30

ANSI B 16.5-1981
ANSI CLASS 300 RF, JIS-20K

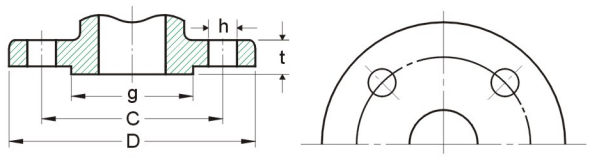

Class 300 steel pipe flange dimensions

Nominal Size		D		C		g		t		(h)Bolt hole		Bolt	
in	mm	in	mm	in	mm	in	mm	in	mm	in	mm	Number	Diam.
1/2	15	3.75	95	2.62	66.5	1.38	35	0.56	14.3	0.62	16	4	1/2
3/4	20	4.62	117	3.25	82.5	1.69	43	0.62	15.9	0.75	19	4	5/8
1	25	4.88	124	3.50	89.0	2.00	51	0.69	17.5	0.75	19	4	5/8
1-1/4	32	5.25	133	3.88	98.5	2.50	64	0.75	19.1	0.75	19	4	5/8
1-1/2	40	6.12	156	4.50	114.5	2.88	73	0.81	20.7	0.88	22	4	3/4
2	50	6.50	165	5.00	127.0	3.62	92	0.88	22.3	0.75	19	8	5/8
2-1/2	65	7.50	190	5.88	149.0	4.12	105	1.00	25.4	0.88	22	8	3/4
3	80	8.25	210	6.62	168.0	5.00	127	1.12	28.6	0.88	22	8	3/4
4	100	10.00	254	7.88	200.0	6.19	157	1.25	31.8	0.88	22	8	3/4
5	125	11.00	279	9.25	235.0	7.28	185	1.38	35.0	0.88	22	8	3/4
6	150	12.50	318	10.62	270.0	8.50	216	1.44	36.6	0.88	22	12	3/4
8	200	15.00	381	13.00	330.0	10.62	270	1.62	41.3	1.00	25	12	7/8
10	250	17.50	444	15.25	387.5	12.75	324	1.88	47.7	1.12	29	16	1
12	300	20.50	521	17.75	451.0	15.00	381	2.00	50.8	1.25	32	16	1-1/8
14	350	23.00	584	20.25	514.5	16.25	413	2.12	54.0	1.25	32	20	1-1/8
16	400	25.50	648	22.50	571.5	18.50	470	2.25	57.2	1.38	35	20	1-1/4
18	450	28.00	711	24.75	628.5	21.00	533	2.38	60.4	1.38	35	24	1-1/4
20	500	30.50	775	27.00	686.0	23.00	584	2.50	63.5	1.38	35	24	1-1/4
24	600	36.00	914	32.00	813.0	27.25	692	2.75	69.9	1.62	41	24	1-1/2

Height of raised face is 0.06 inch (1.6 mm) each.

JIS-20K steel pipe flange dimensions

Nominal Size		D		C		g		t		(h)Bolt hole		Bolt	
in	mm	in	mm	in	mm	in	mm	in	mm	in	mm	Number	Diam.
1/2	15	3.74	95	2.76	70	2.05	52	0.55	14	0.59	15	4	M12
3/4	20	3.94	100	2.95	75	2.28	58	0.63	16	0.59	15	4	M12
1	25	4.92	125	3.54	90	2.76	70	0.63	16	0.75	19	4	M12
1-1/4	32	5.31	135	3.94	100	3.15	80	0.71	18	0.75	19	4	M16
1-1/2	40	5.51	140	4.13	105	3.35	85	0.71	18	0.75	19	4	M16
2	50	6.10	155	4.72	120	3.94	100	0.71	18	0.75	19	8	M16
2-1/2	65	6.89	175	5.51	140	4.72	120	0.79	20	0.75	19	8	M16
3	80	7.87	200	6.30	160	5.31	135	0.87	22	0.75	19	8	M16
4	100	8.86	225	7.28	185	6.30	160	0.95	24	0.91	23	8	M20
5	125	10.63	270	8.86	225	7.68	195	1.02	26	0.91	23	8	M20
6	150	12.00	305	10.24	260	9.06	230	1.10	28	0.98	25	12	M22
8	200	13.78	350	12.00	305	10.83	275	1.18	30	1.00	25	12	M22
10	250	16.93	430	14.96	380	13.58	345	1.34	34	1.06	27	12	M24
12	300	18.90	480	16.93	430	15.56	395	1.42	36	1.06	27	16	M24
14	350	21.26	540	18.90	480	17.32	440	1.57	40	1.30	33	16	M34x3
16	400	23.82	605	21.26	540	19.49	495	1.81	46	1.30	33	16	M30x3
18	450	26.57	675	23.82	605	22.05	560	1.89	48	1.30	33	20	M30x3
20	500	28.74	730	25.98	660	24.21	615	1.97	50	1.30	33	20	M30x3
24	600	33.27	845	30.31	770	28.35	720	2.13	54	1.54	39	24	M36x3

ANSI B 16.5-1981
ANSI CLASS 600 RF, JIS-40K

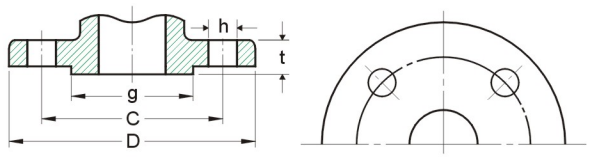

Class 600 steel pipe flange dimensions

Nominal Size		D		C		g		t		(h)Bolt hole		Bolt	
in	mm	in	mm	in	mm	in	mm	in	mm	in	mm	Number	Diam.
1/2	15	3.75	95	2.62	66.5	1.38	35	0.82	20.9	0.62	16	4	1/2
3/4	20	4.62	117	3.25	82.5	1.69	43	0.88	22.3	0.75	19	4	5/8
1	25	4.88	124	3.50	89.0	2.00	51	0.94	23.9	0.75	19	4	5/8
1-1/2	40	6.12	156	4.50	114.5	2.88	73	1.13	28.7	0.88	22	4	3/4
2	50	6.50	165	5.00	127.0	3.62	92	1.25	31.8	0.75	19	8	5/8
3	80	8.25	210	6.62	168.0	5.00	127	1.50	38.2	0.88	22	8	3/4
4	100	10.75	273	8.50	216.0	6.19	157	1.75	44.5	1.00	25	8	7/8
6	150	14.00	356	11.50	292.0	8.50	216	2.13	54.1	1.12	29	12	1
8	200	16.50	419	13.75	349.0	10.62	270	2.44	62.0	1.25	32	12	1-1/8
10	250	20.00	508	17.00	432.0	12.75	324	2.75	69.9	1.38	35	16	1-1/4
12	300	22.00	559	19.25	489.0	15.00	381	2.88	73.1	1.38	35	20	1-1/4
14	350	23.75	603	20.75	527.0	16.25	413	3.00	76.3	1.50	38	20	1-3/8
16	400	27.00	686	23.75	603.0	18.50	470	3.25	82.6	1.62	41	20	1-1/2

Height of raised face is 0.25 inch (6.4 mm) each.

JIS-40K steel pipe flange dimensions

Nominal Size		D		C		g		t		(h)Bolt hole		Bolt	
in	mm	in	mm	in	mm	in	mm	in	mm	in	mm	Number	Diam.
1/2	15	4.53	115	3.15	80	2.17	55	0.79	20	0.75	19	4	M16
3/4	20	4.72	120	3.35	85	2.36	60	0.79	20	0.75	19	4	M16
1	25	5.12	130	3.74	95	2.76	70	0.87	22	0.75	19	4	M16
1-1/2	40	6.30	160	4.72	120	3.54	90	0.94	24	0.91	23	4	M20
2	50	6.50	165	5.12	130	4.13	105	1.02	26	0.75	19	8	M16
3	80	8.27	210	6.69	170	5.51	140	1.26	32	0.91	23	8	M20
4	100	9.84	250	8.07	205	6.50	165	1.42	36	0.98	25	8	M22
6	150	13.98	355	11.61	295	9.45	240	1.73	44	1.30	33	12	M30x3
8	200	15.94	405	13.58	345	11.42	290	1.97	50	1.30	33	12	M30x3
10	250	18.70	475	16.14	410	13.98	355	2.20	56	1.30	33	12	M30x3
12	300	21.26	540	18.50	470	16.14	410	2.36	60	1.54	39	16	M36x3
14	350	23.03	585	20.28	515	17.91	455	2.52	64	1.54	39	16	M36x3
16	400	25.39	645	22.44	570	20.28	515	2.76	70	1.54	39	16	M36x3

HOW TO ORDER

ZV BALL VALVES are ordered by catalog number as listed as the following. The ordering system for the **ZV BALL VALVES** are designed so that you can easily identify the type, configuration, size and material of the ball valves as well as an applicable valve size and process connection.

□-□ □-□ □-□ □-□ □-□-□-□-□-□-□

Valve Type	Port Configuration	Pressure Class	Valve Size	End Connection	Body Mat'l	Seat Mat'l	Seal Mat'l	Trim Mat'l	Operator
F-Floating	10-Reduced	10-Class 150	00:1/2"	A-RF(ANSI)	S-316S.S.	G-Glass	G-Glass	S-316S.S.	B-Bare
T-Trunnion	20-Full	30-Class 300	11:3/4"	D-RF(DIN)	C-Carbon	Filled TFE	Filled TFE	(STD.)	Stem
W-3WAY	30-Trunnion	60-Class 600	01:1"	J-RF(JIS)	Steel	N-Nylon	R-Graphite	O-Other	E-Elec.
		A0-JIS 10K	22:1-1/4"	B-B.W.	A-ASTM	D-Delrin	V-Virgin	Mat'l	Operator
		B0-JIS 20K	33:1-1/2"	R-RTJ	A105	P-Peek	PTFE		G-Gear
		C0-JIS 40K	02:2"	S-S.W.	F-ASTM	V-Virgin	S-Spiral		Operator
			44:2-1/2"	W-WELDING	A350 LF2	PTFE	Wound		L-Lever
			03:3"	T-THREADED	L-316L	R-Graphite	Graphite		P-Pneu.
			04:4"			+ PTFE			Operator
			05:5"						H-Hydraulic
			06:6"						Operator
			08:8"						
			10:10"						
			12:12"						
			14:14"						
			⋮						

Cv Factors

Capacity factors for the 1000 / 2000 series valves are listed below to be used as a reference for correct valves sizing.

	1/2"	3/4"	1"	1.5"	2"	3"	4"	6"	8"	10"
1010 with insert downstream	9	15	28	108	158	337	489	973	1255	2110
1010 with insert upstream	8	14	27	106	153	317	449	899	1180	2005
1030 with insert downstream	11	18	33	130	190	404	580	1168	1580	2600
1030 with insert upstream	10	16	30	127	183	380	540	1070	1400	2370
2010, 2030,2060	28	52	90	250	480	1200	2250	5400	9600	16000

Stem Torque of Ball Valve at Maximum Differential Pressure (in-lb)

	1/2"	3/4"	1"	1.5"	2"	3"	4"	6"	8"	10"	12"	14"
Full Port 150# / JIS 10K	90	126	180	216	924	1476	2700	5364	9276	12960	13260	24840
Reduced Port 150# / JIS 10K	36	48	72	144	198	414	558	2880	5580	8880	11060	-
Full Port 300# / JIS 20K	120	168	240	360	1068	1752	3216	6900	16620	23040	25512	39876
Reduced Port 300# / JIS 20K	42	60	90	204	336	768	1320	3588	7200	-	-	-
Full Port 600# / JIS 40K	204	300	528	900	1308	2208	4044	9372	30516	41472	53544	64212

7000 SERIES 2-PC FORGED STEEL FLOATIONG BALL VALVE (MODEL:7000)

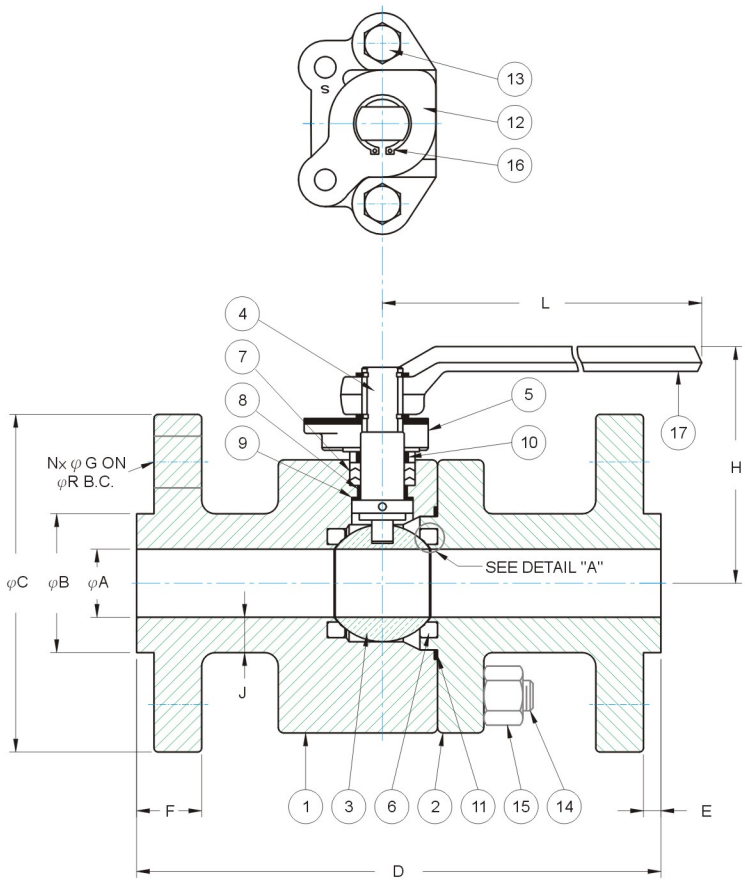

FLANGE END

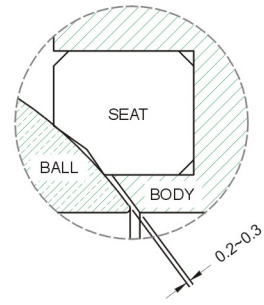

DETAIL "A"

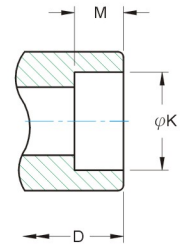

SOCKET WELD END

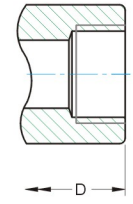

THREADED END

NOTES :

* FACE TO FACE FOLLOWING : ANSI CLASS 150/300/600.
* WALL THICK FOLLOWING ANSI CLASS 900.

CLASS 150

(UNIT=MM)

Size	φA	φB	φC	D	E	F	φG	H	J	φK	L	M	N	φR	BOLT
1/2	15.0	35.0	89.0	108	1.6	11.2	16.0	64.5	6.5	21.9	132	12	4	60.5	7/16"
3/4	20.0	43.0	98.0	117	1.6	11.2	16.0	67.5	9.0	27.2	132	14	4	70.0	1/2"
1	25.0	51.0	108.0	127	1.6	11.2	16.0	79.0	10.0	33.9	163	14	4	79.2	1/2"
1-1/2	40.0	73.0	127.0	165	1.6	14.3	16.0	104.0	11.0	48.8	229	17	4	98.5	5/8"
2	50.0	92.0	152.0	178	1.6	15.9	19.0	111.0	12.0	61.3	229	19	4	120.5	5/8"

CLASS 300

(UNIT=MM)

Size	φA	φB	φC	D	E	F	φG	H	J	φK	L	M	N	φR	BOLT
1/2	15.0	35.0	95.0	140	1.6	14.3	16.0	64.5	6.5	21.9	132	12	4	66.5	7/16"
3/4	20.0	43.0	117.0	152	1.6	15.9	19.0	67.5	9.0	27.2	132	14	4	82.5	1/2"
1	25.0	51.0	124.0	165	1.6	17.5	19.0	79.0	10.0	33.9	163	14	4	89.0	1/2"
1-1/2	40.0	73.0	156.0	190	1.6	20.7	22.0	104.0	11.0	48.8	229	17	4	114.5	5/8"
2	50.0	92.0	165.0	216	1.6	22.3	19.0	111.0	12.0	61.3	229	19	8	127.0	5/8"

CLASS 600

(UNIT=MM)

Size	φA	φB	φC	D	E	F	φG	H	J	φK	L	M	N	φR	BOLT
1/2	15.0	35.0	95.0	165	6.4	20.9	16.0	64.5	6.5	21.9	132	12	4	66.5	7/16"
3/4	20.0	43.0	117.0	190	6.4	22.3	19.0	67.5	9.0	27.2	132	14	4	82.5	1/2"
1	25.0	51.0	124.0	216	6.4	23.9	19.0	79.0	10.0	33.9	163	14	4	89.0	1/2"
1-1/2	40.0	73.0	156.0	241	6.4	28.7	22.0	104.0	11.0	48.8	229	17	4	114.5	5/8"
2	50.0	92.0	165.0	292	6.4	31.8	19.0	142.0	12.0	61.3	229	19	8	127.0	5/8"

MATERIAL LIST

ITEM	DESCRIPTION	MATERIAL	
		CF8M	WCB
1	Body	ASTM A182 F316	ASTM A105
2	Closure	ASTM A182 F316	ASTM A105
3	Ball	ASTM A351 CF8M	ASTM A351 CF8M
4	Stem S/A	ASTM A276-316	ASTM A276-316
5	Gland	ASTM A351 CF8	ASTM A351 CF8
6	Seat	RPTFE / Peek	RPTFE / Peek
7	Stem Packing	PTFE / Graphite	PTFE / Graphite
8	Stem Bearing	PTFE / Graphite	PTFE / Graphite
9	Thrust Washer	PTFE / Graphite	PTFE / Graphite
10	Gland Bushing	PTFE / Graphite	PTFE / Graphite
11	Body Gasket	PTFE / Graphite	PTFE / Graphite
12	Lock Plate	Stainless Steel	Stainless Steel
13	Gland Bolt	Stainless Steel	Carbon Steel
14	Body Stud	ASTM A193 B8	ASTM A193 B7
15	Body Nut	ASTM A194 8A or 8	ASTM A194 2H
16	Snap Ring	Stainless Steel	Stainless Steel
17	Handle	Ductile Iron	Ductile Iron

3-PC EXTENDED BUTT WELD END & BUTT WELD END BALL VALVE (MODEL:701)

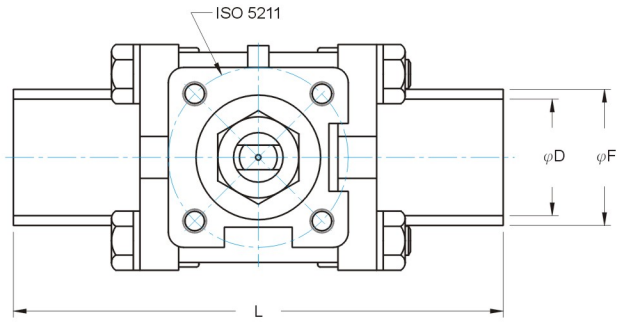

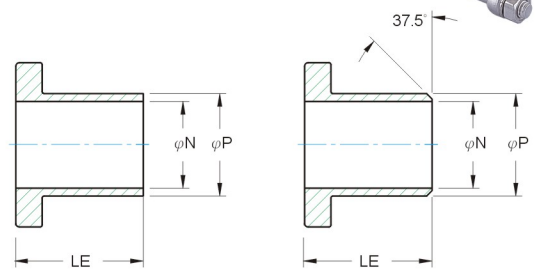

EXTENDED BUTT WELD

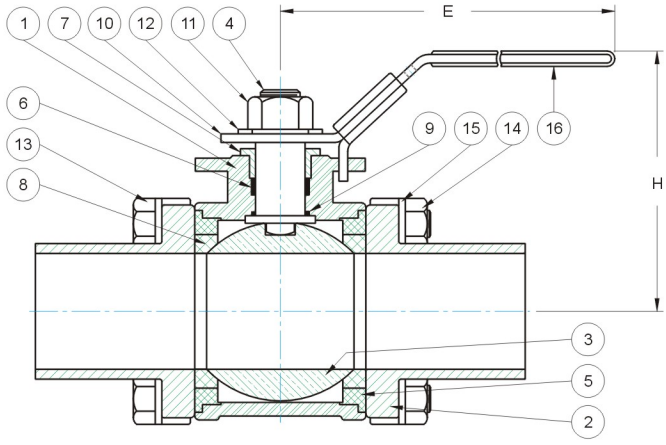

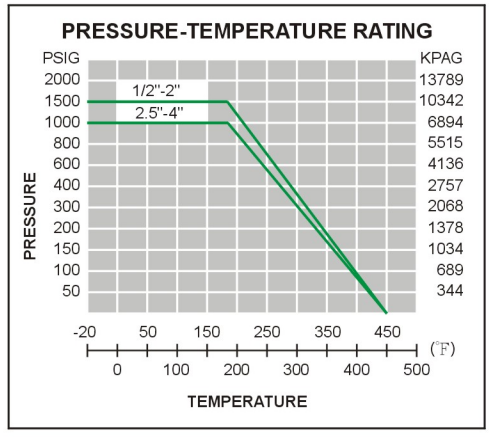

NOTES :

- Blowout-proof stem
- Swing-Away body for maintenance ease
- Welding ends to ANSI B16.11B

DIMENSIONS

(UNIT=MM)

Size	φD	φF	φN	φP	L	LE	H	E	ISO 5211
1/2	17.0	22.7	15.6	21.0	69.0	225.0	72	135	F03
3/4	22.5	27.7	20.7	26.8	78.0	225.0	74	135	F03
1	26.0	33.5	25.8	34.4	84.0	244.0	92	150	F04
1-1/4	35.0	42.2	33.3	43.4	104	253.0	98	150	F04
1-1/2	41.5	48.8	40.5	49.8	119	258.0	109	188	F05
2	53.0	61.0	51.5	61.0	131	275.0	117	188	F05
2-1/2	69.8	77.0	66.0	77.0	190	332.0	147	289	F07
3	82.0	90.0	81.0	91.0	220	353.0	156	304	F10
4	105.0	115.0	101.0	115.0	270	360.0	178	304	F10

MATERIAL LIST

ITEM	PARTS	MATERIAL
1	BODY	ASTM A351 CF8M
2	END CAPS	ASTM A351 CF8M
3	BALL	SUS 316
4	STEM	SUS 316
5	JOINT GASKET	PTFE
6	STEM PACKING	PTFE
7	GLAND	SUS 304
8	BALL SEAT	PTFE
9	STEM WASHER	PTFE
10	HANDLE	SUS 304
11	HANDLE NUT	SUS 304
12	HANDLE WASHER	SUS 304
13	BODY BOLT	SUS 304
14	CAP NUT	SUS 304
15	WASHER	SUS 304
16	HANDLE GRIP	VINYL

3-PC EXTENDED BUTT WELD END 5S & 10S FOR ORBITAL WELDING (MODEL:702)

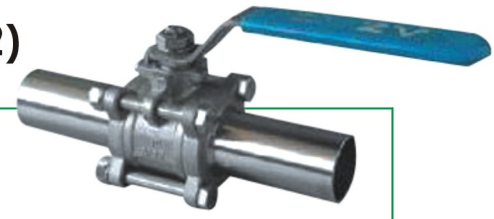

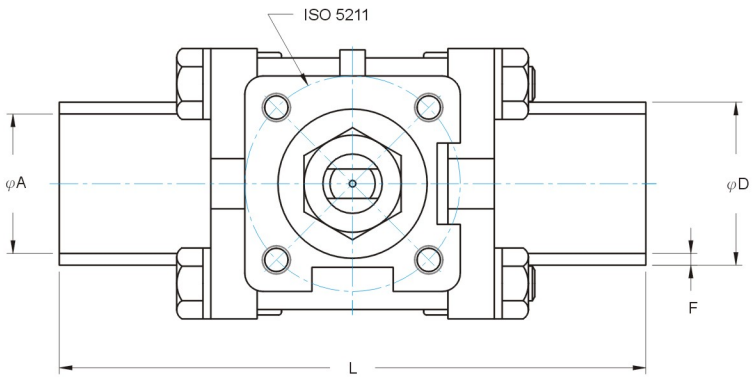

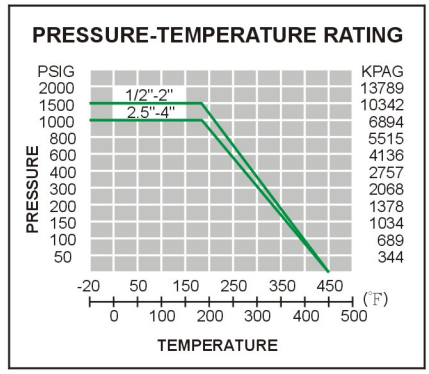

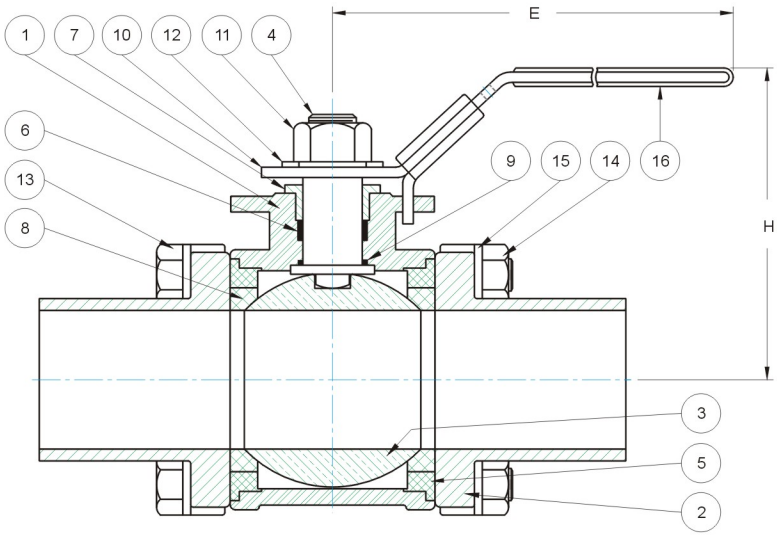

NOTES :

- Blowout-proof stem
- Swing-Away body for maintenance ease
- Welding ends to ANSI B16.11

DIMENSIONS

(UNIT=MM)

Size	φA	φD	L	F		H	E	ISO 5211
				5S	10S			
1/2	15	21.7	150.7	1.65	2.1	55	133	F03
3/4	20	27.2	155.7	1.65	2.1	59	133	F03
1	25	34.0	186.2	1.65	2.8	70	153	F04
1-1/4	32	42.7	195.6	1.65	2.8	75	153	F04
1-1/2	38	48.6	231.6	1.65	2.8	84	190	F05
2	50	60.5	243.4	1.65	2.8	92	190	F05
2-1/2	65	76.3	290.2	2.10	3.0	128	247	F07
3	80	89.1	302.2	2.10	3.0	137	247	F10
4	100	114.3	326.2	2.10	3.0	173	295	F10

MATERIAL LIST

ITEM	PARTS	MATERIAL
1	BODY	A351 CF8M
2	END CAPS	A351 CF8M
3	BALL	SUS 316
4	STEM	SUS 316
5	JOINT GASKET	PTFE
6	STEM PACKING	PTFE
7	GLAND	SUS 304
8	BALL SEAT	PTFE
9	STEM SEAL	PTFE
10	HANDLE	SUS 304
11	HANDLE NUT	SUS 304
12	HANDLE WASHER	SUS 304
13	BODY BOLT	SUS 304
14	CAP NUT	SUS 304
15	WASHER	SUS 304
16	HANDLE GRIP	VINYL

3-PC EXTENDED BUTT WELD END O.D. TUBING FOR ORBITAL WELDING (MODEL:703)

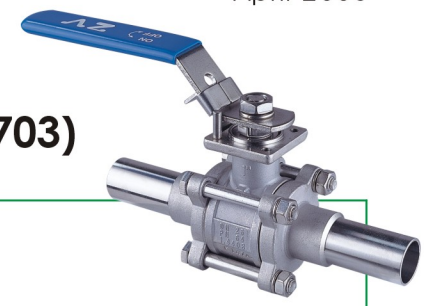

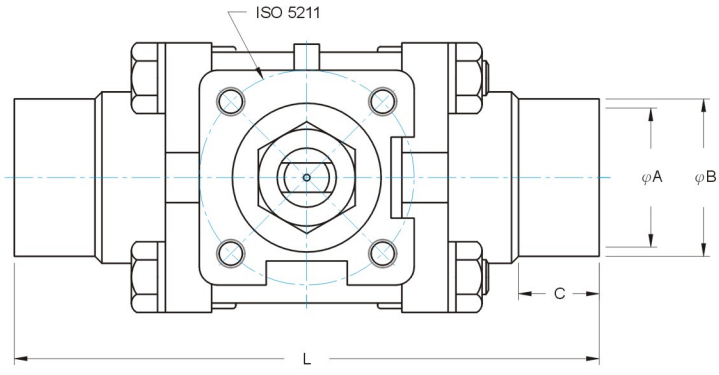

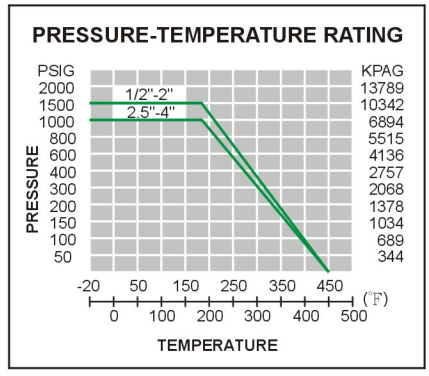

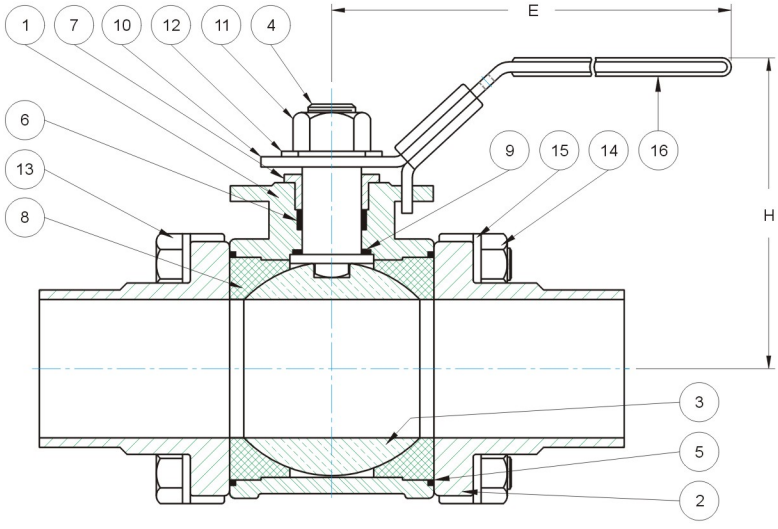

NOTES :

- Blowout-proof stem
- Swing-Away body for maintenance ease
- Welding ends to ANSI B16.11

MATERIAL LIST

ITEM	PARTS	MATERIAL
1	BODY	A351 CF8M
2	END CAPS	A351 CF8M
3	BALL	SUS 316
4	STEM	SUS 316
5	JOINT GASKET	PTFE
6	STEM PACKING	PTFE
7	GLAND	SUS 304
8	SEAT/CAVITY FILLER	PTFE
9	STEM SEAL	PTFE
10	HANDLE	SUS 304
11	HANDLE NUT	SUS 304
12	HANDLE WASHER	SUS 304
13	BODY BOLT	SUS 304
14	CAP NUT	SUS 304
15	WASHER	SUS 304
16	HANDLE GRIP	VINYL

DIMENSIONS

(UNIT=MM)

Size	φA	φB	C	L	H	E	ISO 5211
1/2	9.53	12.7	27.0	127.0	63	127	F03
3/4	15.88	19.05	27.0	127.0	66	127	F03
1	22.2	25.4	27.0	152.4	78	147	F04
1-1/4	31.7	31.7	27.0	152.4	83.5	147	F04
1-1/2	34.9	38.1	27.0	177.8	91.5	205	F05
2	47.5	50.8	27.0	203.2	99.7	205	F05
2-1/2	60.3	63.5	27.0	228.6	140	284	F07
3	73.0	76.2	27.0	254.0	149	284	F10
4	97.4	101.6	27.0	304.8	172	305	F10

3-PC TRI-CLAMP & WELD END BALL VALVE (MODEL:704)

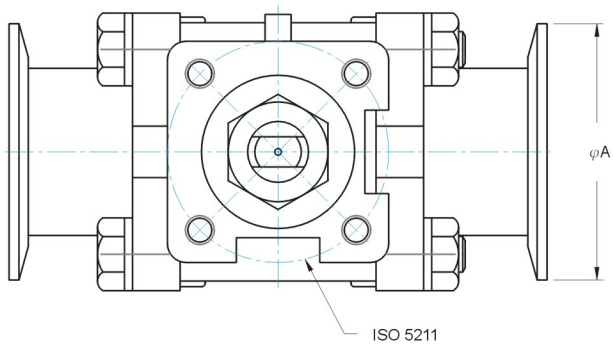

CLAMP END

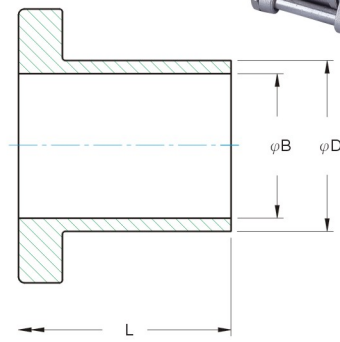

WELD END

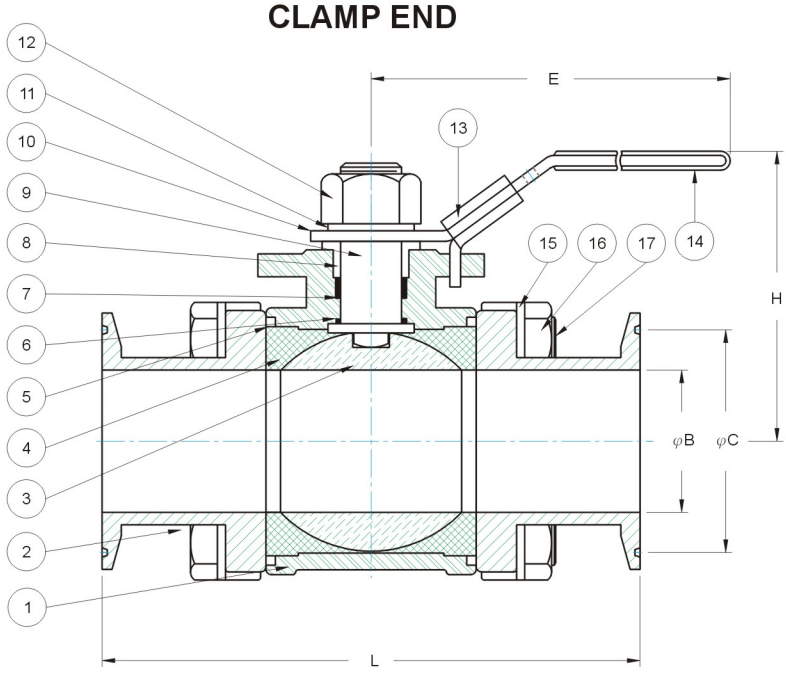

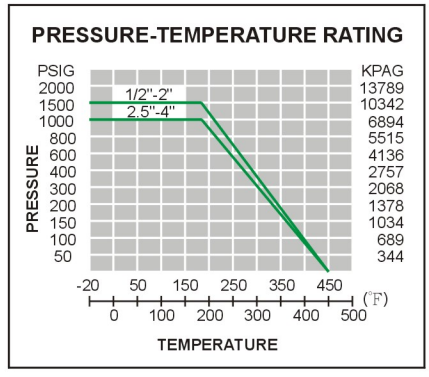

NOTES :

- Blowout-proof stem
- Swing-Away body for maintenance ease

DIMENSIONS

(UNIT=MM)

Size	φA	φB	φC	φD	H	E	L	ISO 5211
1/2	25.0	9.53	20.2	12.7	55	133	89.0	F03 F04
3/4	25.0	15.9	20.2	19.1	59	133	101.0	F03 F04
1	50.4	22.2	43.6	25.4	70	153	114.0	F04 F05
1-1/2	50.4	34.9	43.6	38.2	84	190	140.0	F05 F07
2	64.5	47.6	56.3	50.8	92	190	156.0	F05 F07
2-1/2	77.4	60.2	70.6	63.4	128	247	197.0	F07 F10
3	90.9	73.0	83.3	76.2	137	247	229.0	F07 F10
4	118.9	97.4	110.3	101.6	173	295	241.0	F10

MATERIAL LIST

ITEM	PARTS	MATERIAL
1	BODY	A351 CF8M
2	END CAPS	A351 CF8M
3	BALL	SUS 316
4	SEAT/CAVITY FILLER	PTFE
5	JOINT GASKET	PTFE
6	STEM SEAL	PTFE
7	STEM PACKING	PTFE
8	GLAND	SUS 304
9	STEM	SUS 316
10	HANDLE	SUS 304
11	HANDLE WASHER	SUS 304
12	HANDLE NUT	SUS 304
13	LOCKING PLATE	SUS 304
14	HANDLE GRIP	VINYL
15	WASHER	SUS 304
16	CAP NUT	SUS 304
17	BODY BOLT	SUS 304

3-PC SOCKET WELD & THREADED END BALL VALVE (MODEL:705)

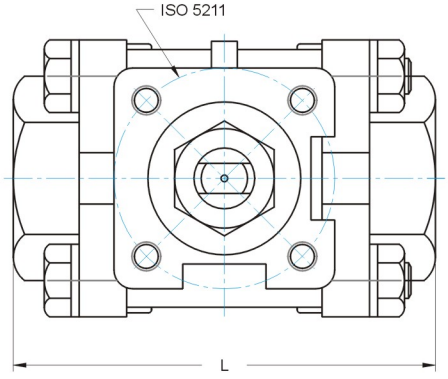

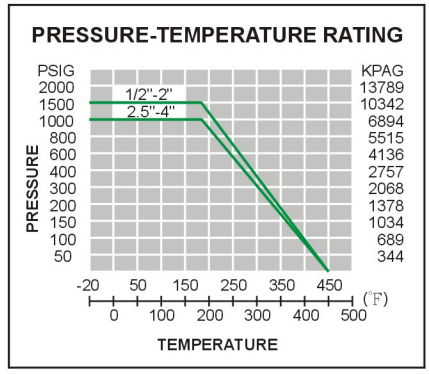

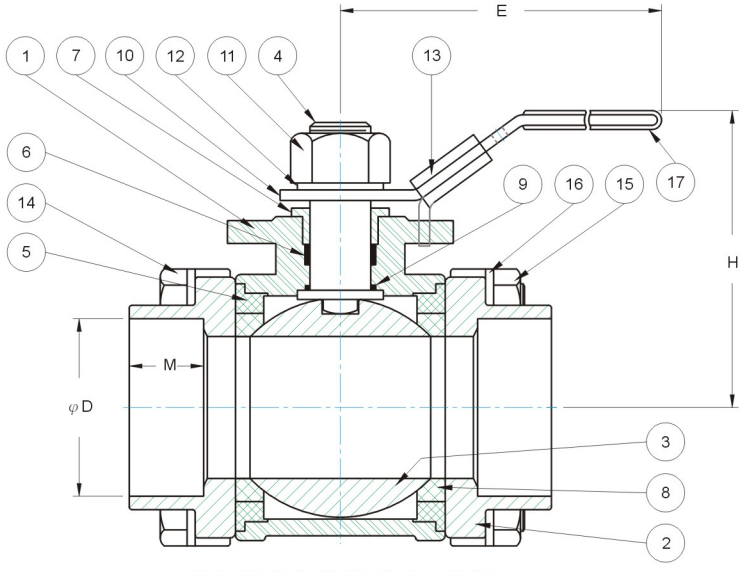

SOCKET WELD END

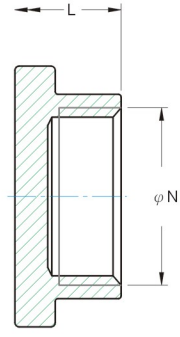

THREADED END

NOTES :

- Blowout-proof stem
- Swing-Away body for maintenance ease
- Welding ends to ANSI B16.11
- NPT Threads to ANSI B1.20.1

DIMENSIONS

(UNIT=MM)

Size	φD	φN	L	M	H	E	ISO 5211
1/4	14.2	NPT or PT or PF or DIN 2999	60.0	11.0	72	135	F03
3/8	17.7		60.0	11.0	72	135	F03
1/2	21.9		69.0	12.0	72	135	F03
3/4	27.2		78.0	14.0	74	135	F03
1	33.9		84.0	14.0	92	150	F04
1-1/4	42.7		104	15.0	98	150	F04
1-1/2	48.8		119	17.0	109	188	F05
2	61.3		131	19.0	117	188	F05
2-1/2	74.0		185	21.0	147	289	F07
3	90.0		205	25.0	156	304	F10
4	115.6		230	30.0	178	304	F10

MATERIAL LIST

ITEM	PARTS	MATERIAL
1	BODY	A351 CF8M
2	END CAPS	A351 CF8M
3	BALL	SUS 316
4	STEM	SUS 316
5	BODY GASKET	PTFE
6	STEM PACKING	PTFE
7	GLAND	SUS 304
8	BALL SEAT	PTFE
9	THRUST WASHER	PTFE
10	HANDLE	SUS 304
11	HANDLE NUT	SUS 304
12	HANDLE WASHER	SUS 304
13	LOCKING PLATE	SUS 304
14	BODY BOLT	SUS 304
15	CAP NUT	SUS 304
16	WASHER	SUS 304
17	HANDLE GRIP	PLASTIC

2-PC 3WAY L & T PORT THREADED END BALL VALVE (MODEL:706)

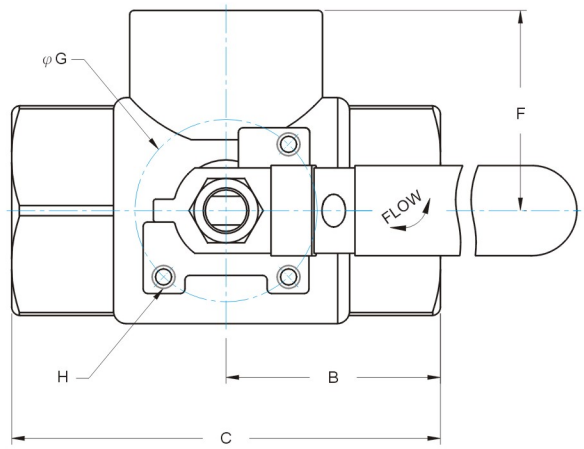

FLOW PATTERN FOR L-PORT

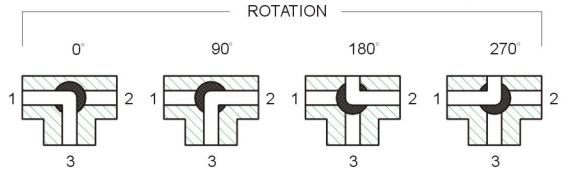

FLOW PATTERN FOR T-PORT

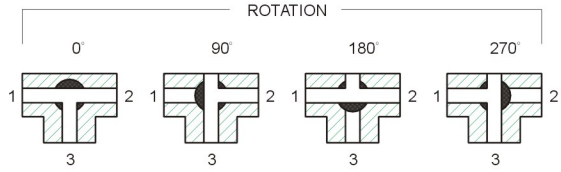

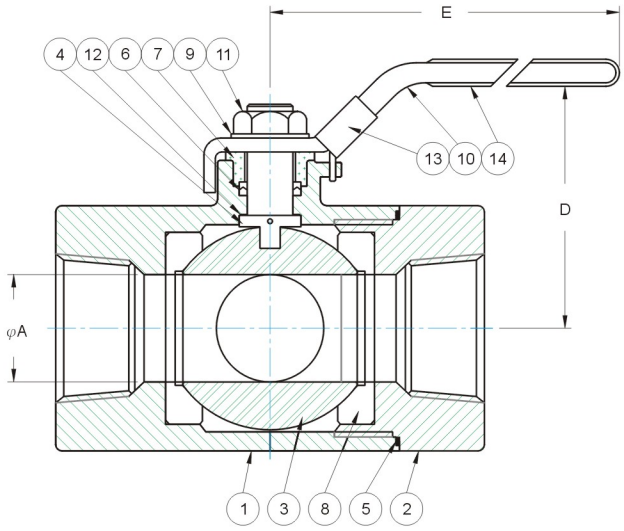

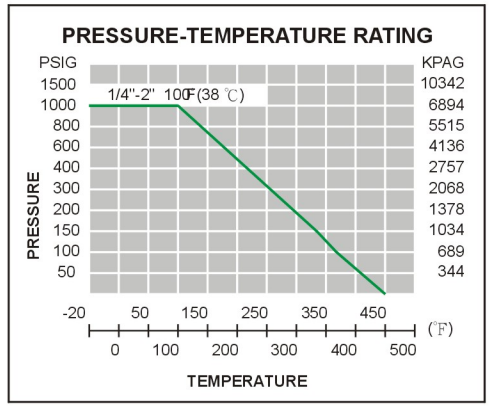

NOTES :

- Blowout-proof stem
- Reduced port
- Threadedd end
- NPT threads to ANSI B1.20.1
- ISO 5211 Mounting pad
- L & T port for diverter use
- Locking lever handle
- 1000 P.S.I. W.O.G. 1/4"~2"

DIMENSIONS

(UNIT=MM)

Size	φA	B	C	D	E	F	φG	H	Cv	WEIGHTS
1/4	11.1	29.4	58.7	50.8	100.0	30.0	36.0	M6x1	4	0.33 Kg
3/8	12.7	29.4	58.7	50.8	100.0	30.0	36.0	M6x1	5.4	0.36 Kg
1/2	12.7	29.4	58.7	50.8	100.0	30.0	36.0	M6x1	5.4	0.39 Kg
3/4	17.3	38.1	76.2	58.5	130.0	38.1	36.0	M6x1	12	0.66 Kg
1	20.6	40.8	82.0	62.4	130.0	42.7	42.0	M6x1	15	0.85 Kg
1-1/4	25.4	51.0	102.0	74.1	155.0	51.0	50.0	M8x1.25	21	1.49 Kg
1-1/2	31.8	55.5	111.0	78.9	155.0	61.0	50.0	M8x1.25	34	2.04 Kg
2	38.1	68.5	137.0	94.2	175.0	71.4	50.0	M8x1.25	47	3.16 Kg

MATERIAL LIST

ITEM	PARTS	MATERIAL
1	BODY	ASTM A351 CF8M
2	END CAP	ASTM A351 CF8M
3	BALL	SUS 316
4	STEM	SUS 316
5	BODY GASKET	PTFE
6	STEM PACKING	PTFE
7	GLAND	SUS 304
8	BALL SEAT	PTFE
9	THRUST WASHER	PTFE
10	HANDLE	SUS 304
11	HANDLE NUT	SUS 304
12	HANDLE WASHER	SUS 304
13	LOCKING PLATE	SUS 304
14	BODY BOLT	SUS 304
15	CAP NUT	SUS 304
16	WASHER	SUS 304
17	HANDLE GRIP	PLASTIC

1-PC 1000WOG THREADED END BALL VALVE (MODEL:801)

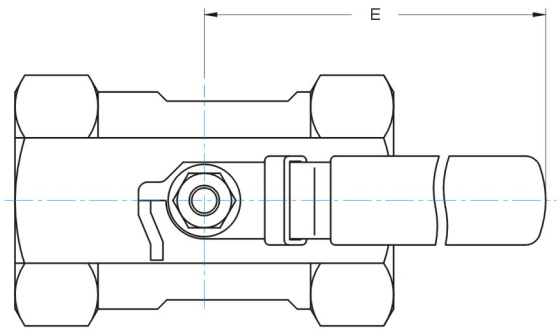

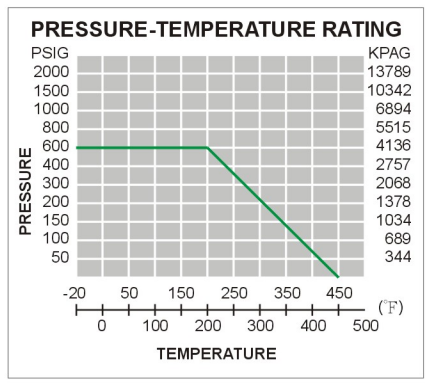

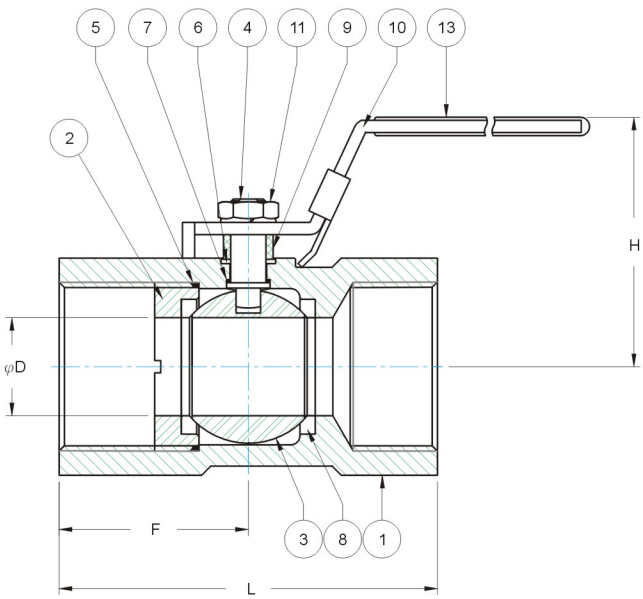

NOTES :

- Reduced Port
- Threaded end
- NPT threads to ANSI B1.20.1
- 800/1000 P.S.I. W.O.G. 1/4"~2"

DIMENSIONS

(UNIT=MM)

Size	φD	E	F	H	L
1/4	5.0	61.0	19.0	31.0	39.0
3/8	7.0	72.0	21.0	36.0	44.0
1/2	9.2	85.0	27.5	41.0	56.5
3/4	12.5	85.0	30.0	44.0	59.0
1	16.0	101.0	36.0	48.0	71.0
1-1/4	20.0	101.0	40.0	54.0	78.0
1-1/2	25.0	125.0	42.5	65.0	83.0
2	32.0	125.0	51.0	72.0	100.0

MATERIAL LIST

ITEM	PARTS	MATERIAL
1	BODY	A351 CF8M
2	INSERT	A351 CF8M
3	BALL	SUS 316
4	STEM	SUS 316
5	BODY GASKET	PTFE
6	STEM PACKING	PTFE
7	STEM SEAL	PTFE
8	BALL SEAT	PTFE
9	BUSHING	SUS 304
10	HANDLE	SUS 304
11	STEM NUT	SUS 304
12	WASHER	SUS 304
13	HANDLE GRIP	VINYL

1-PC 2000WOG THREADED END BALL VALVE (MODEL:802)

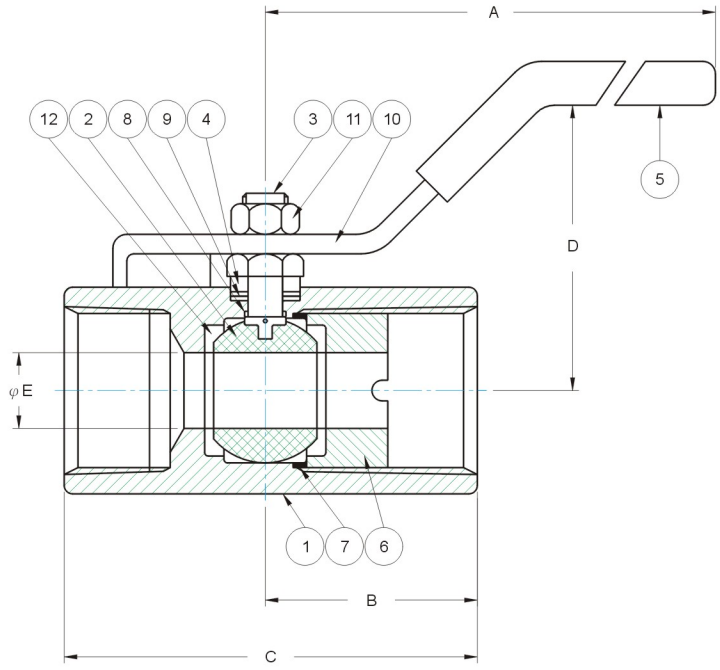

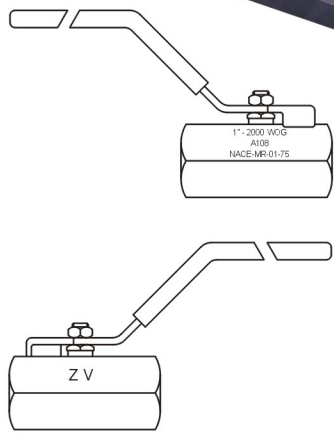

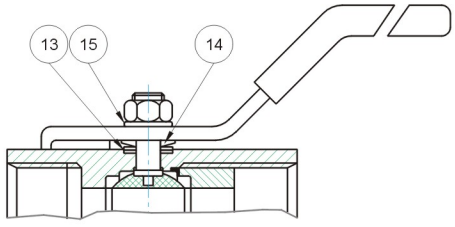

FOR 1/4" & 3/8"

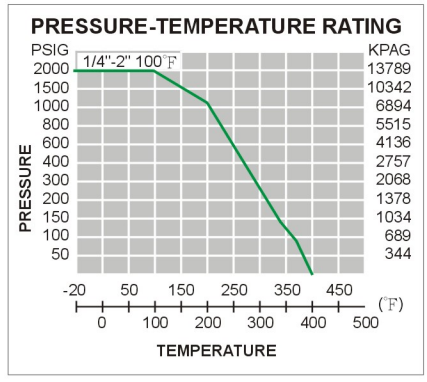

- Blowout-proof stem
- One piece body design
- NPT Threads to ANSI B1.20.1
- Reduced Port
- 2000 P.S.I. W.O.G. 1/4"~2"

NOTES :

1. 22HRC MAX. MATERIAL HARDNESS TO COMPLY WITH NACE STD MR-0175.
2. OVAL HANDLES OPTIONALLY AVAILABLE.
3. A108 GR. 1020 MEETS PHYSICAL CHARACTERISTICS OF A105.
4. MATERIAL TEST RESULTS AND INSPECTION CERTIFICATES AVAILABLE UPON REQUEST.

DIMENSIONS

(UNIT=MM)

Size	A	B	C	D	φE	Cv	WEIGHTS
1/4	66.3	23.9	43.1	29.1	4.6	1.5	0.078 Kg
3/8	80.0	26.1	47.4	33.4	6.8	3.5	0.120 Kg
1/2	109.5	33.0	61.7	54.4	9.2	5.7	0.315 Kg
3/4	109.5	37.3	69.9	59.2	12.5	10	0.460 Kg
1	122.0	44.5	85.7	62.2	16.0	16	0.690 Kg
1-1/4	147.5	48.6	93.7	68.0	20.0	25	1.360 Kg
1-1/2	147.5	52.6	101.6	69.0	24.7	40	1.590 Kg
2	154.0	57.7	114.3	81.9	32.0	62	2.700 Kg

MATERIAL LIST

ITEM	PARTS	MATERIAL
1	BODY	A108 Gr.1020
2	BALL	S.S.304 A276
3	STEM	S.S.304 A276
4	PACKING BUSHING	S.S.304 A276
5	HANDLE GRIP	VINYL
6	SEAT RETAINER	A108 Gr.1020
7	GASKET	PTFER
8	THRUST WASHER	PTFE
9	STEM PACKING	PTFE
10	HANDLE	C.S.PLATED
11	STEM NUT	C.S.PLATED
12	BALL SEAT	RPTFE
13	SPRING WASHER	S.S.304 A276
14	BELLEVILLE WASHER	S.S.301
15	STEM WASHER	S.S.304 A276

2-PC 1000WOG THREADED END BALL VALVE (MODEL:901)

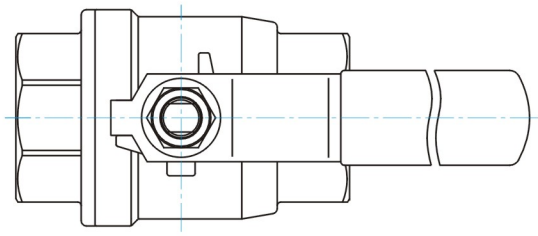

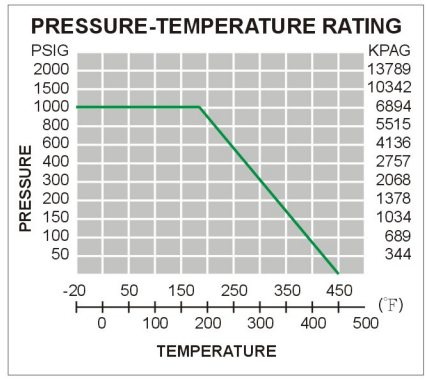

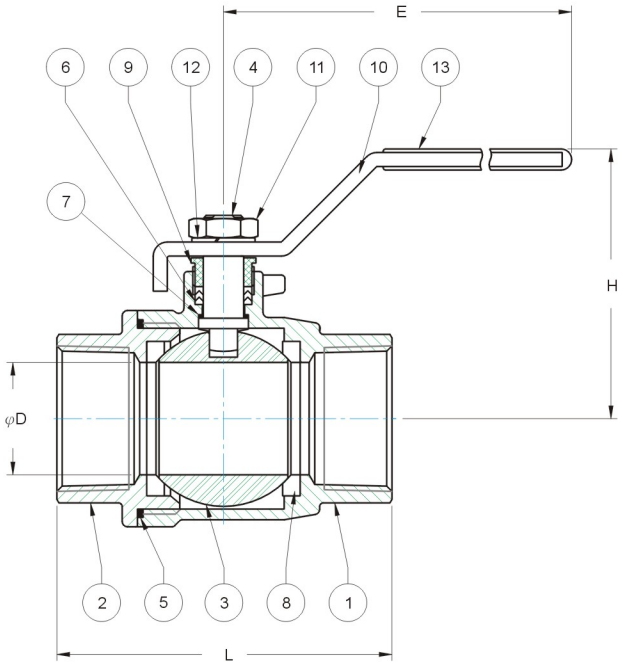

NOTES :

- Full Port
- Threaded end
- NPT threads to ANSI B1.20.1
- 1000 P.S.I. W.O.G. 1/4"~2"

DIMENSIONS

(UNIT=MM)

Size	φD	E	H	L
1/4	10.5	102.0	48.0	49.5
3/8	10.5	102.0	48.0	49.5
1/2	15.0	131.0	56.0	59.0
3/4	20.0	131.0	59.0	70.0
1	25.0	153.0	69.0	80.0
1-1/4	32.0	153.0	75.0	94.5
1-1/2	38.0	188.0	79.0	104.0
2	50.0	188.0	88.0	124.0

MATERIAL LIST

ITEM	PARTS	MATERIAL
1	BODY	A351 CF8M
2	END CAP	A351 CF8M
3	BALL	SUS 316
4	STEM	SUS 316
5	BODY GASKET	PTFE
6	STEM PACKING	PTFE
7	STEM SEAL	PTFE
8	BALL SEAT	PTFE
9	GLAND NUT	SUS 304
10	HANDLE	SUS 304
11	HANDLE NUT	SUS 304
12	WASHER	SUS 304
13	HANDLE GRIP	VINYL

2-PC 1000WOG THREADED END BALL VALVE (MODEL:902)

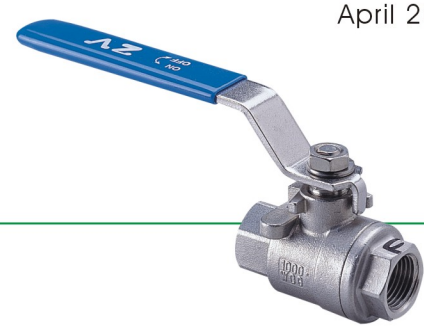

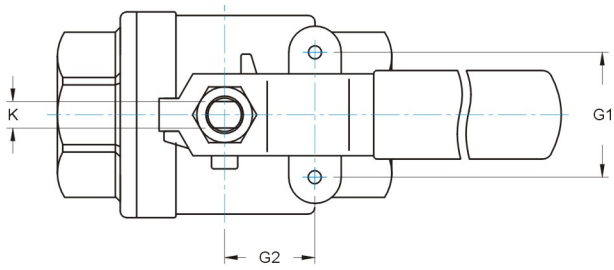

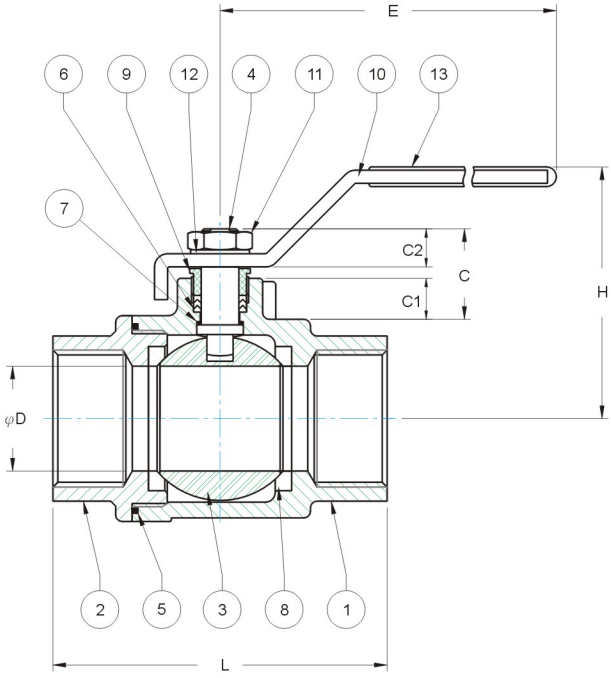

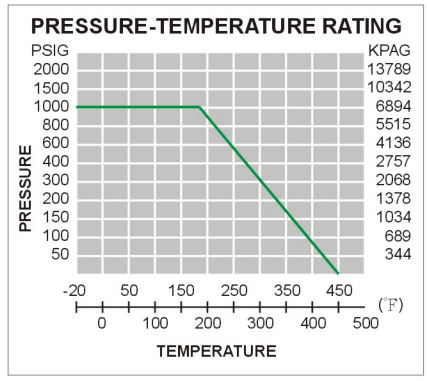

NOTES :

- Full Port
- Threaded end
- NPT threads to ANSI B1.20.1
- 1000 P.S.I. W.O.G. 1/4"~3"

DIMENSIONS

(UNIT=MM)

Size	C	C1	C2	φD	E	H	K	L	G1	G2
1/4	23.5	8.3	11.0	11.6	108	54.0	5.0	55.2	28.0	12.7
3/8	23.5	8.3	11.0	12.5	108	54.0	5.0	55.2	28.0	12.7
1/2	24.7	9.8	11.0	15.0	133	55.0	6.3	65.3	28.0	12.7
3/4	25.5	10.7	11.0	20.0	133	59.0	6.3	75.5	35.0	22.4
1	30.4	11.6	14.8	25.0	153	70.0	8.0	88.7	35.0	22.4
1-1/4	29.7	11.1	14.8	32.0	153	75.0	8.0	101.4	38.1	25.4
1-1/2	33.0	12.0	16.0	38.0	190	84.0	9.5	109.3	38.1	25.4
2	30.7	9.0	16.0	50.0	190	92.0	9.5	124.0	38.1	25.4
2-1/2	48.5	15.7	23.0	65.0	247	128	12	159.3	55.0	35.0
3	47.5	14.0	23.0	80.0	247	137	12	175.3	55.0	35.0

MATERIAL LIST

ITEM	PARTS	MATERIAL
1	BODY	A351 CF8M
2	END CAP	A351 CF8M
3	BALL	SUS 316
4	STEM	SUS 316
5	BODY GASKET	PTFE
6	STEM PACKING	PTFE
7	STEM SEAL	PTFE
8	BALL SEAT	PTFE
9	GLAND NUT	SUS 304
10	HANDLE	SUS 304
11	HANDLE NUT	SUS 304
12	WASHER	SUS 304
13	HANDLE GRIP	VINYL

2-PC 2000WOG THREADED END BALL VALVE (MODEL:903)

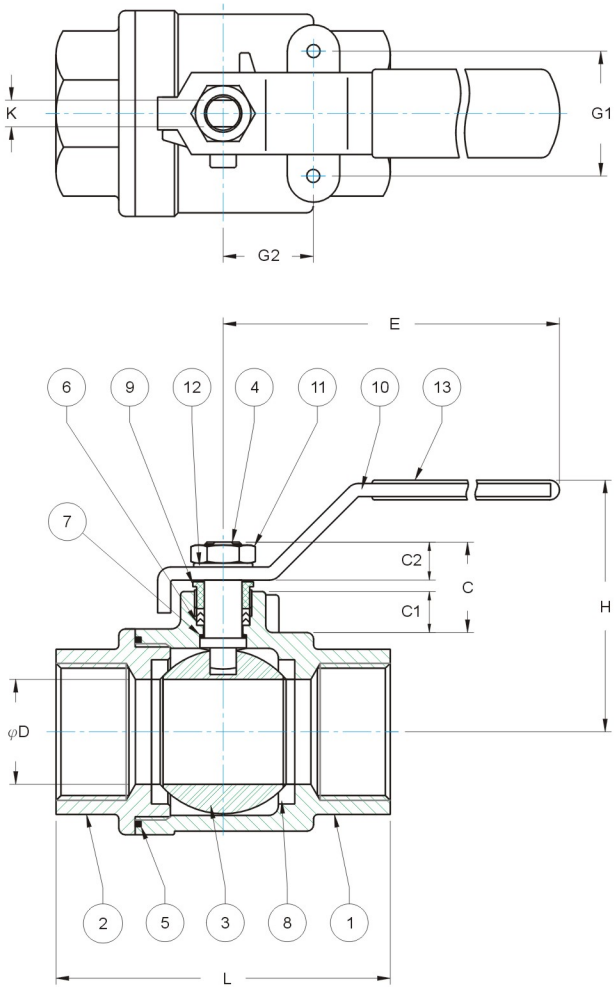

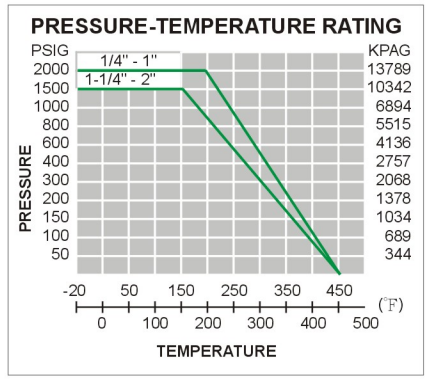

NOTES :

- Reduced Port
- Threaded end
- NPT threads to ANSI B1.20.1
- 1500 P.S.I. W.O.G. 1/4"~1"
- 2000 P.S.I. W.O.G. 1-1/4"~2"

DIMENSIONS

(UNIT=MM)

Size	C	C1	C2	φD	E	H	K	L	G1	G2
1/4	17.0	6.7	7.8	9.5	108	51.0	5.0	52.0	28.0	12.7
3/8	17.0	6.7	7.8	9.5	108	51.0	5.0	52.0	28.0	12.7
1/2	23.0	7.9	11.0	12.7	108	54.0	5.0	62.0	28.0	12.7
3/4	24.8	10.1	11.0	15.0	133	55.0	6.3	69.0	35.0	22.4
1	24.0	9.3	11.0	20.0	133	59.0	6.3	84.0	35.0	22.4
1-1/4	30.6	11.4	14.8	25.0	153	70.0	8.0	90.0	38.1	25.4
1-1/2	29.0	10.9	14.8	32.0	153	75.0	8.0	104.0	38.1	25.4
2	32.5	11.5	16.0	38.0	190	84.0	9.5	117.0	38.1	25.4

MATERIAL LIST

ITEM	PARTS	MATERIAL
1	BODY	A351 CF8M
2	END CAP	A351 CF8M
3	BALL	SUS 316
4	STEM	SUS 316
5	BODY GASKET	PTFE
6	STEM PACKING	PTFE
7	STEM SEAL	PTFE
8	BALL SEAT	RPTFE
9	GLAND NUT	SUS 304
10	HANDLE	SUS 304
11	HANDLE NUT	SUS 304
12	WASHER	SUS 304
13	HANDLE GRIP	VINYL

2-PC 1000WOG ISO 5211 DIRECT MOUNT PAD THREADED END BALL VALVE (MODEL:904)

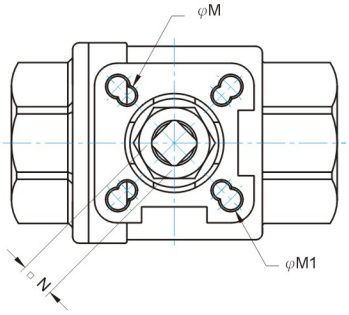

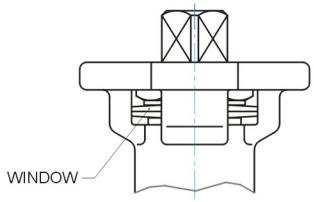

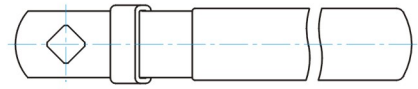

HANDLE

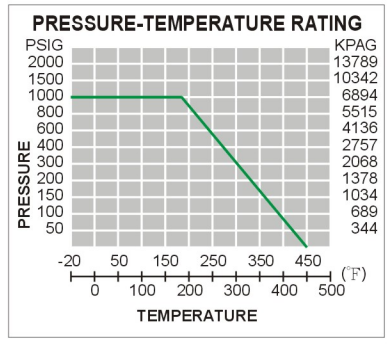

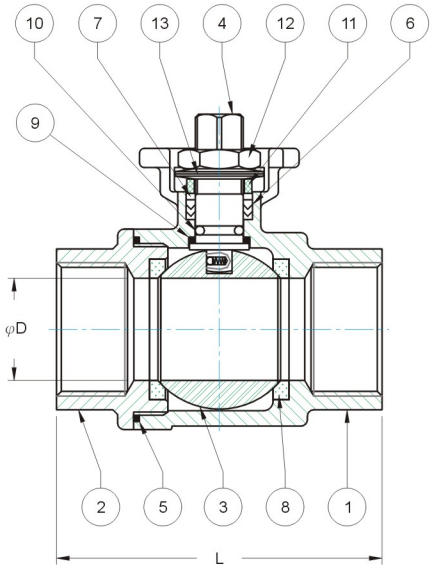

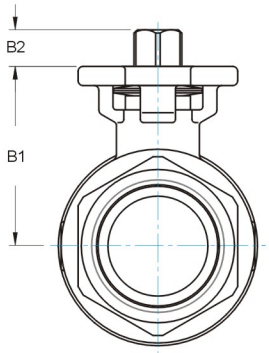

NOTES :

- Blowout-proof stem
- Full Port
- Threaded end
- NPT threads to ANSI B1.20.1
- 1000 P.S.I. W.O.G. 1/2"~3"

DIMENSIONS

(UNIT=MM)

Size	B1	B2	φD	L	□N	φM	φM1	IS05211
1/2	35.8	9.0	15.0	65.3	9.0	5.5	5.5	F05 F07
3/4	38.8	9.0	20.0	75.5	9.0	5.5	5.5	F07 F10
1	52.0	11.0	25.0	88.7	11.0	5.5	6.5	F04 F05
1-1/4	56.8	11.0	32.0	101.4	11.0	5.5	6.5	F03 F04
1-1/2	65.7	15.5	38.0	109.3	14.0	6.5	8.5	F03 F04
2	73.9	15.5	50.0	124.0	14.0	6.5	8.5	F05 F07
2-1/2	93.0	17.0	65.0	159.3	17.0	9.0	11.0	F04 F05
3	102	17.0	80.0	175.3	17.0	9.0	11.0	F07 F10

MATERIAL LIST

ITEM	PARTS	MATERIAL	
1	BODY	CF8M	WCB
2	END CAP	CF8M	WCB
3	BALL	SUS 316	
4	STEM	SUS 316	
5	BODY GASKET	PTFE	
6	STEM PACKING	PTFE	
7	BUSHING	PTFE	
8	BALL SEAT	PTFE	
9	STEM SEAL	PTFE	
10	O-RING	VITON	
11	GLAND	SUS 304	
12	STEM NUT	SUS 304	
13	BELLEVILLE WASHER	SUS 301	

HIGH PRESSURE NEEDLE VALVE
CLASS 6000-10000 PSI (MODEL:9000)

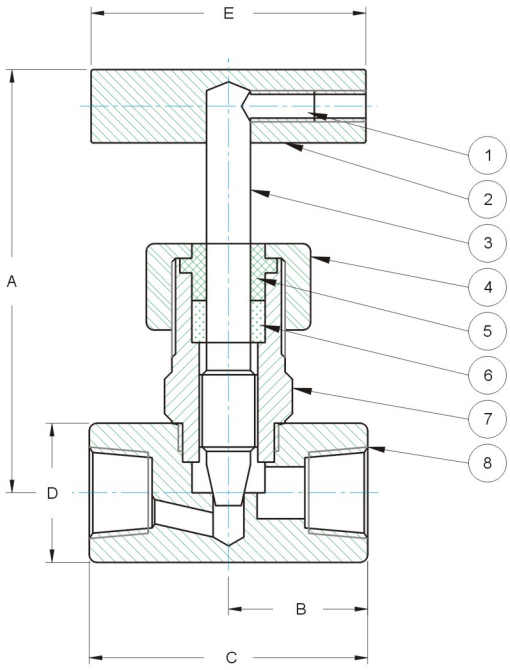

SIZE :1/8"~1"
(MODEL:9001)

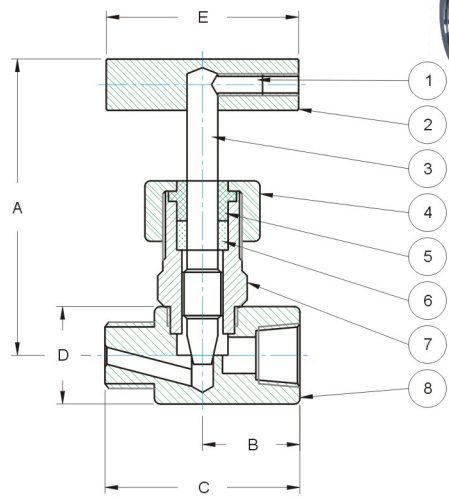

SIZE : 1/4"~1"
(MODEL:9002)

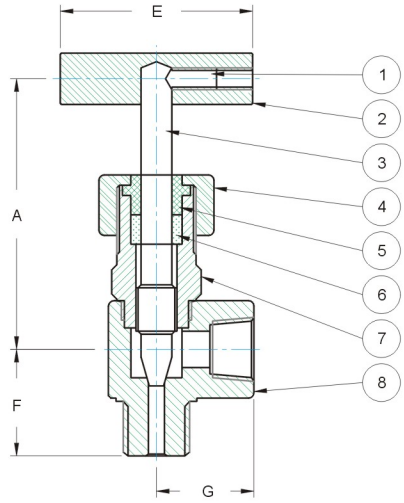

SIZE : 1/4"~1"
(MODEL:9003)

NOTES :

- SCREWED-IN BONNET
- RISING STEM
- T HANDLE OPERATION
- CONNECTING THREADS: ANSI B2.1/ BS21/ DIN
- WORKING PRESSURE: 6000~10000 in/lb²
- CASTING OR FORGED STEEL BODY

DIMENSIONS

(UNIT=MM)

Size	A	B	C	D	E	F	G
1/8	75.0	29.0	58.0	25.0	50.0	-	-
1/4	75.0	29.0	58.0	25.0	50.0	29.0	29.0
3/8	75.0	29.0	58.0	25.0	50.0	29.0	29.0
1/2	87.0	32.5	65.0	30.0	60.0	34.0	34.0
3/4	90.0	35.0	70.0	35.0	60.0	38.0	38.0
1	103.0	40.0	80.0	45.0	80.0	45.0	45.0

MATERIAL LIST

ITEM	DESCRIPTION	MATERIAL
1	SET SCREW	AISI 304S.S.
2	HANDLE	AISI 410S.S.
3	STEM	AISI 316S.S.
4	GLAND NUT	AISI 304S.S.
5	GLAND	AISI 304S.S.
6	PACKING	PTFE
7	BONNET	CF8M / *316S.S.
8	BODY	CF8M / *316S.S. / A105

* FOR 10000 PSI NEEDLE VALVES

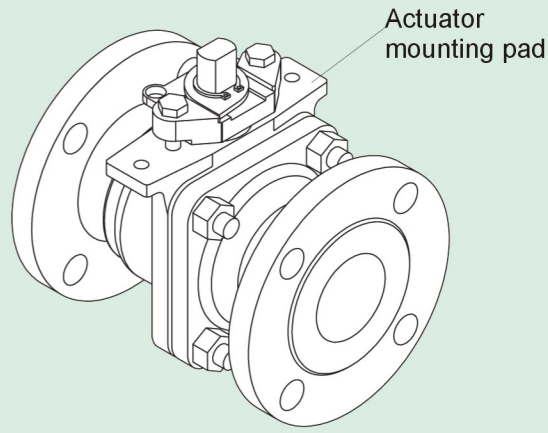

ACTUATOR MOUNTING PADS

ZV ball valves, two-piece full bore design and one-piece design are furnished with integral pads for easy, on-the-spot mounting of actuators. Mounting pads may be drilled to customers' specifications.

Customers are requested to prepare mounting brackets and connectors for the actuators chosen for their valve automation. Actuators may be mounted on **ZV** ball valves without disassembly of valve glands.

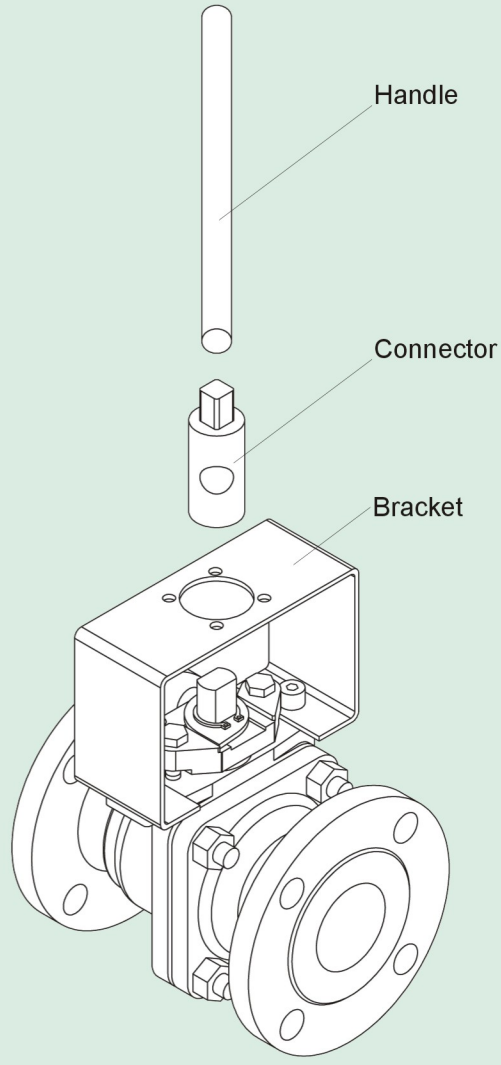

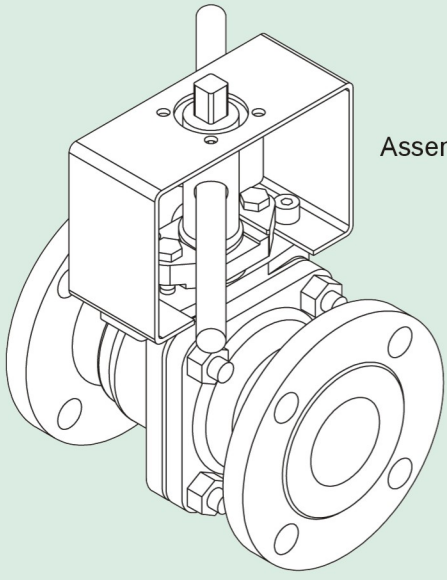

ZV

Pneumatic Rack & Pinion Actuators

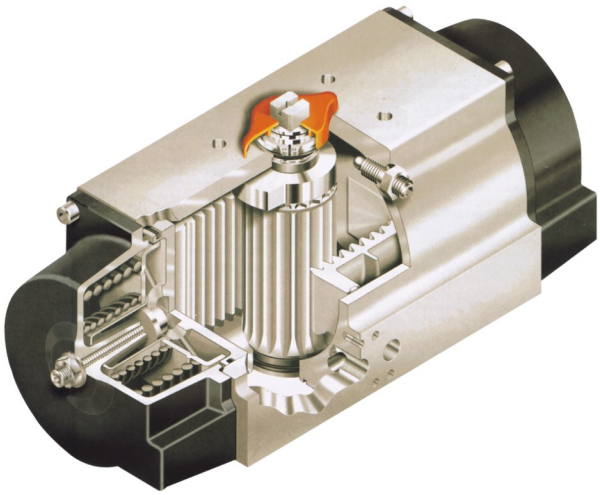

PERFORMANCE:

• Operating Pressure Range:	40 to 120 PSIG.
• Maximum Allowable Working Pressure:	150 PSIG.
• Maximum Operating Pressure:	120 PSIG.
• Operating Media:	Dry or lubricated non-corrosive gas.
• Operating Temperature Standard:	-40°F to +200°F

OPERATION

Double-Acting (Top View)

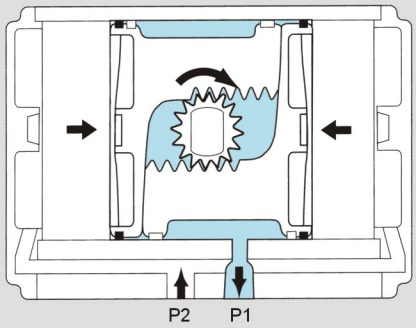

For clockwise output, apply pressure to P2, which force the pistons to move together. The volume between the pistons is exhausted at P 1.

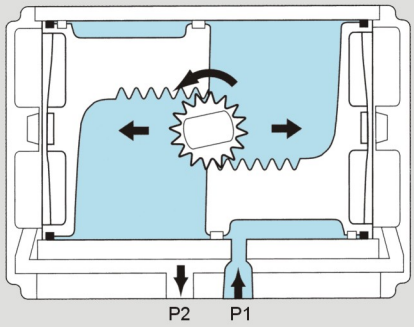

For counterclockwise output, apply pressure to P1, which force the pistons apart. The linear travel of the pistons is converted to a rotation of the drive shaft by the rack to pinion connection. The volume outside each piston is exhausted at P2.

*When required Reverse Rotation the pistons can be inverted in the housing resulting in a clockwise rotation when pressure is applied to P1.

Spring-Return (Top View)

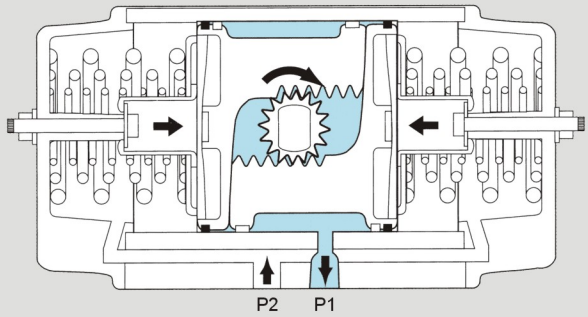

For clockwise output, the volume between the pistons is exhausted at P1, causing the springs to force the pistons together. The volume outside the pistons is vented at P2.

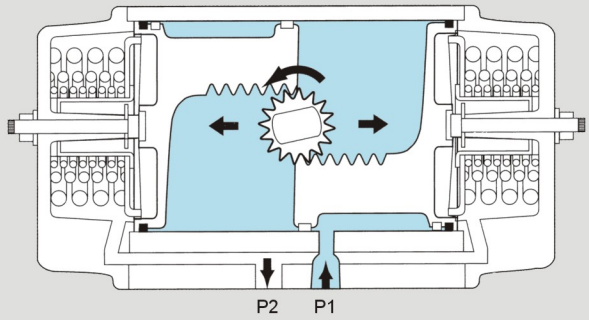

For counterclockwise output, apply pressure to P1, which force the pistons apart and compress the springs. The linear travel of the pistons is converted to a rotation of the drive shaft by the rack to pinion connection. The volume outside each piston is exhausted at P2.

*When required, Reverse Rotation the pistons can be inverted in the housing resulting in a clockwise rotation when pressure is applied to P1 and a counterclockwise rotation when P1 is vented.

Design & Construction:

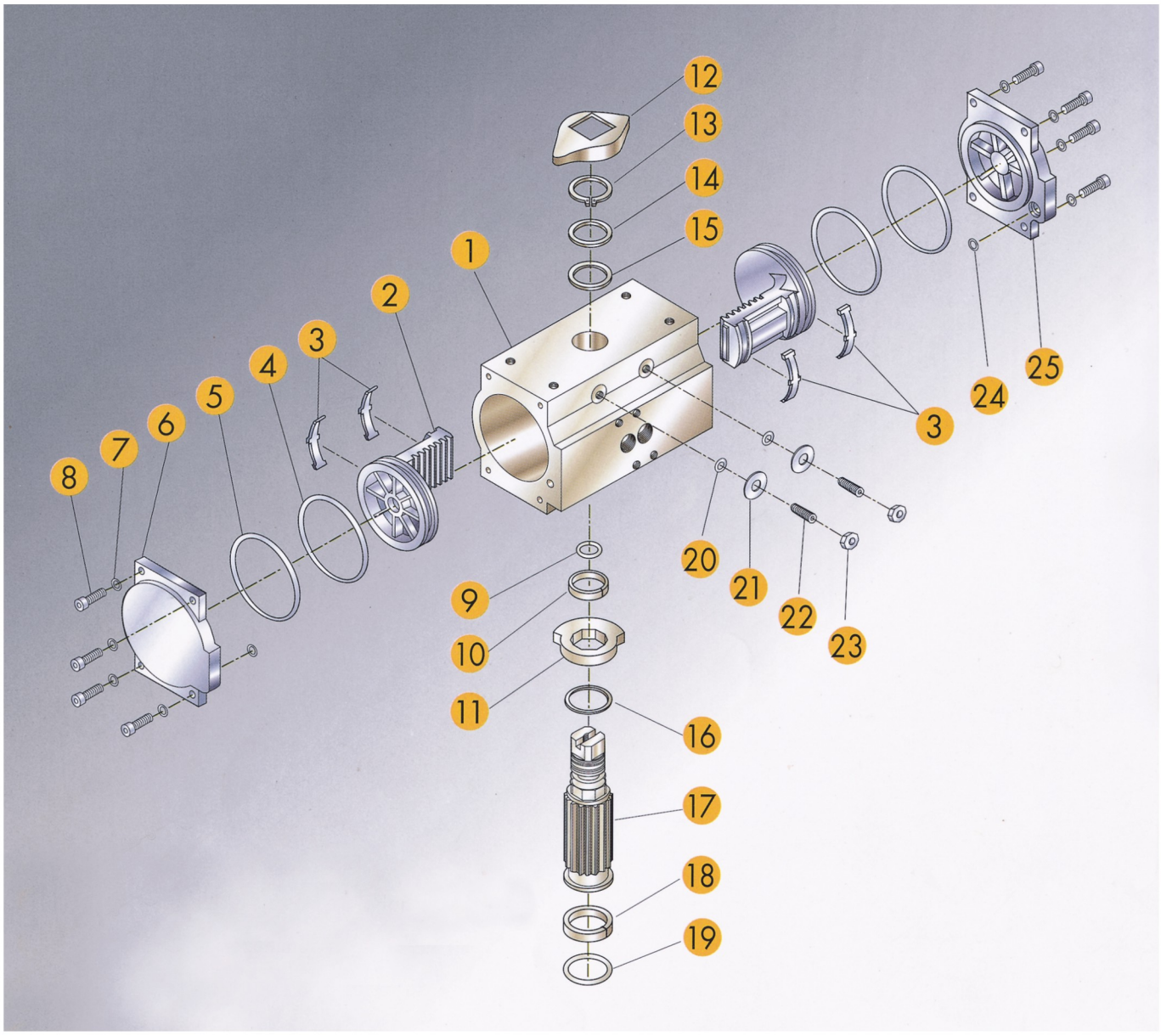

1. BODY: Extruded aluminum alloy (Hard anodized)
2. PISTONS: Die cast aluminum alloy
3. BEARING: Nylon
4. O-RING: Buna-N
5. O-RING: Buna-N
6. END CAP(L): Die cast aluminum alloy
7. WASHER: Stainless steel
8. CAP SCREW: Stainless steel
9. O-RING: Buna-N
10. BEARING: Nylon
11. STOP CAM: Sinteral steel
12. PISTON INDICATOR: Polyethylene
13. RETAINING RING: Stainless steel
14. WASHER: Stainless steel
15. BEARING: Nylon
16. RETAINING RING: Stainless steel
17. PINION: Carbon steel (Electroless nickel plated)
18. BEARING: Nylon
19. O-RING: Buna-N
20. O-RING: Buna-N
21. WASHER: Stainless steel
22. STOP SCREW: Stainless steel
23. NUT: Stainless steel
24. O-RING: Buna-N
25. END CAP(R): Die cast aluminum alloy

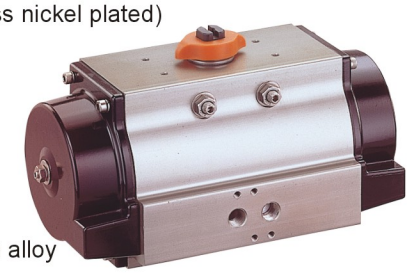

ZV-SERIES

Pneumatic Rack & Pinion Actuators Torque Ratings (in-lbs)

Double-Acting Actuators

Model	Air Torque Output Operating at Pressure-Psig				
	40	60	80	100	120
ZV-250	125	187	250	312	375
ZV-450	225	337	450	562	675
ZV-1000	500	750	1000	1250	1500
ZV-2250	1125	1687	2250	2812	3375
ZV-5000	2500	3750	5000	6250	7500
ZV-11000	5500	8250	11000	13750	16500
ZV-18000	13087	17450	21812	25170	29160
ZV-27000	18995	25327	31659	36150	40100

Single-Reture Actuators

Model Number		Spring Torque Output		Air Torque Output at Operating Pressure-Psig									
Basic	Spring Set			40		60		80		100		120	
		start	end	start	end	start	end	start	end	start	end	start	end
ZV-250	2	69	45	76	47	138	109	201	172	263	234	326	312
	3	104	67			113	70	176	133	229	195	301	258
	4	140	90			88	31	151	93	213	156	276	218
	5	175	112					126	54	189	116	251	179
	6	209	135							164	77	227	139
ZV-450	2	126	81	135	83	248	196	361	309	473	421	586	533
	3	190	121			203	125	316	238	428	350	541	463
	4	254	162			158	54	271	167	383	279	496	392
	5	317	202					226	96	339	209	451	321
	6	381	243							293	137	406	251
ZV-1000	2	279	179	300	184	549	433	798	682	1048	931	1297	1181
	3	418	270			449	278	698	526	947	775	1196	1025
	4	559	360			350	120	599	371	848	618	1097	867
	5	698	450					500	212	749	464	998	710
	6	839	540							650	304	899	557
ZV-2250	2	659	394	690	395	1253	958	1816	1521	2379	2084	2939	2647
	3	990	590			1034	591	1596	1154	2159	1717	2722	2280
	4	1320	787			816	226	1379	788	2029	1351	2505	1914
	5	1650	984					1161	424	1724	984	2287	1549
	6	1980	1181							1506	621	2069	1181
ZV-5000	2	1560	785	1590	803	2780	1990	3970	3180	5160	4380	6350	5570
	3	2340	1180			2380	1200	3570	2400	4760	3590	5960	4780
	4	3130	1570			1980	414	3180	1600	4370	2800	5560	3990
	5	3910	1960					2780	815	3970	2010	5160	3200
	6	4690	2360							3570	1220	4760	2410
ZV-11000	2	3400	1720	3460	1760	6060	4360	8660	6960	11300	9560	13900	12200
	3	5100	2570			5200	2650	7790	5240	10400	7840	13000	10400
	4	6790	3430			4330	932	6930	3530	9520	6130	12100	8730
	5	8490	4290					6060	1810	8660	4410	11300	7010
	6	10200	5150							7790	2700	10400	5300
ZV-18000	5	4612	3190	5535	4113	9898	8475	14260	12838	18623	17200		
	6	5534	3828	4897	3190	9260	7553	13622	11915	17985	16278		
	7	6457	4466	4259	2268	8622	6631	12984	10993	17347	15356		
	8	7379	5104			7984	5708	12346	10071	16709	14433		
	9	8302	5742			7346	4786	11708	9148	16071	13511		
	10	9224	6380					11070	8226	15433	12588		
ZV-27000	5	7088	4828	7836	5576	14168	11907	20499	18239	26831	24571		
	6	8505	5793	6870	4158	13202	10490	19534	16822	25865	23153		
	7	9923	6759	5905	2741	12236	9072	19568	15404	24900	21736		
	8	11340	7724			11271	7655	17603	13986	23934	20318		
	9	12758	8690			10305	6237	16637	12569	22969	18901		
	10	14176	9655					15672	11151	22003	17483		

Pneumatic Rack & Pinion Actuators

Dimensions

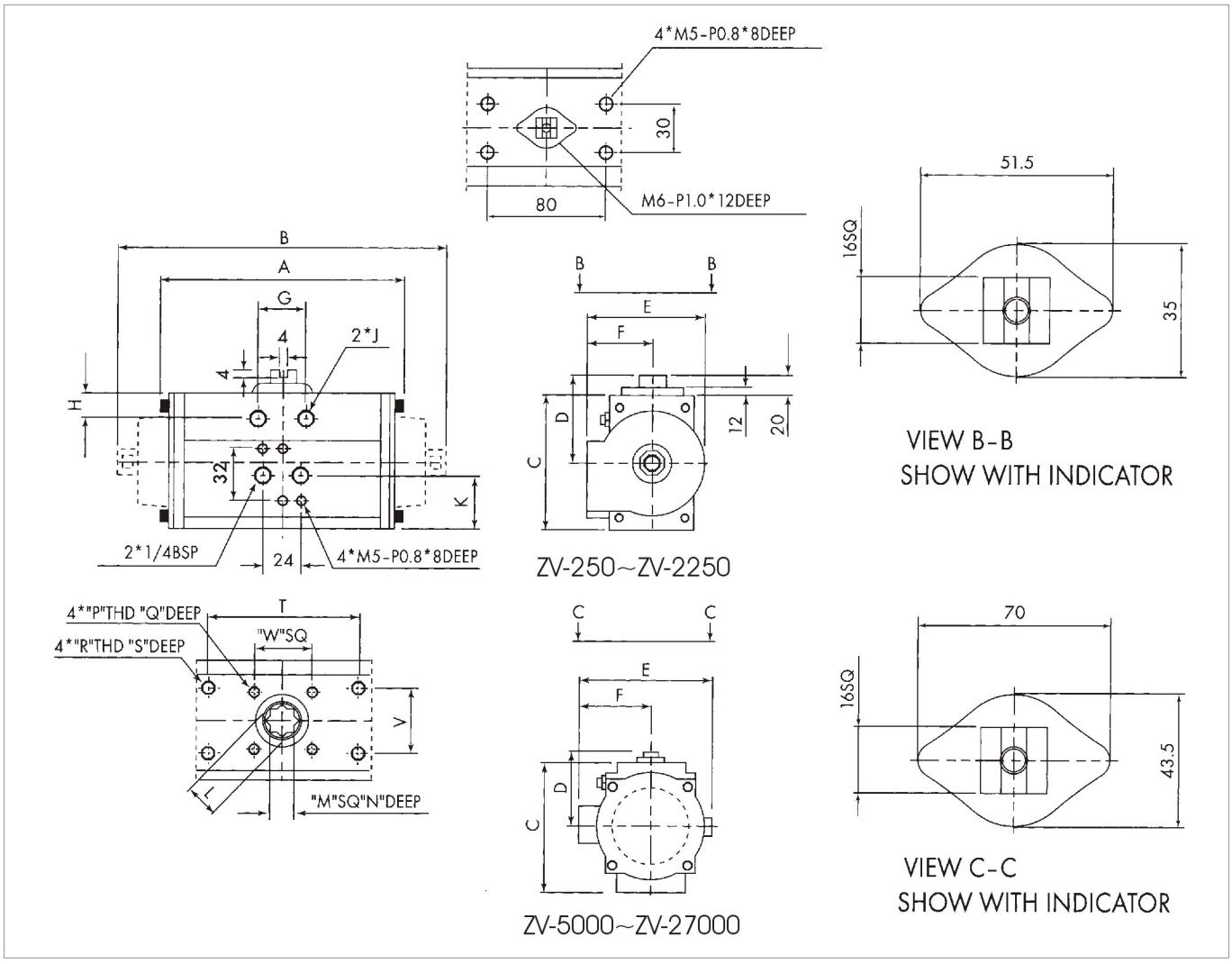

Model	Output Torque at 80psi air	A	B	C	D	E	F	G	H	J	K
ZV-250	250IN-LB	144.3	194.6	79.0	57.7	81.4	47.8	32.5	12.6	M5xP0.8	29.7
ZV-450	450IN-LB	149.2	205.6	98.0	67.4	95.0	51.5	32.5	13.8	M6xP1.0	30.2
ZV-1000	1000IN-LB	183.0	250.0	121.0	79.2	119.0	64.5	46.2	16.6	M8xP1.25	33.5
ZV-2250	2250IN-LB	259.6	355.0	141.0	89.5	140.5	75.5	54.0	18.6	M10xP1.5	39.0
ZV-5000	5000IN-LB	364.4	487.0	196.0	116.5	204.8	107.8	79.4	28.3	M12xP1.75	99.0
ZV-11000	11000IN-LB	490.0	642.0	243.7	138.5	238.2	125.0	95.3	35.8	M16xP2.0	124.7
ZV-18000	18000IN-LB	621.0	621.0	298.5	198.0	262.0	131.0	N/A	N/A	N/A	78.5
ZV-27000	27000IN-LB	684.0	684.0	330.0	205.0	329.5	166.0	N/A	N/A	N/A	165.0

Model	Output Torque at 80psi air	L	M	N	P ISO/DIN	Q	R ISO/DIN	S	T	V	W ISO/DIN
ZV-250	250IN-LB	14.5	11.0	17.0	M6xP1.0	10.0	M6xP1.0	10.0	82.55	29.77	35.36
ZV-450	450IN-LB	18.8	14.0	21.0	M6xP1.0	10.0	M6xP1.0	10.0	82.55	29.77	35.36
ZV-1000	1000IN-LB	23.0	17.0	25.5	M8xP1.25	12.0	M8xP1.25	12.0	109.52	44.45	49.50
ZV-2250	2250IN-LB	29.5	22.0	31.0	M10xP1.5	15.0	M8xP1.25	12.0	109.52	44.45	72.13
ZV-5000	5000IN-LB	35.5	27.0	35.0	M12xP1.75	19.0	M12xP1.75	19.0	254.0	88.39	88.39
ZV-11000	11000IN-LB	47.5	36.0	45.0	M16xP2.0	24.0	M16xP2.0	24.0	254.0	99.00	99.00
ZV-18000	18000IN-LB	65.0	46.0	55.0	M16xP2.0	38.0	N/A	N/A	N/A	99.00	99.00
ZV-27000	27000IN-LB	65.0	46.0	55.0	M16xP2.0	38.0	N/A	N/A	N/A	99.00	99.00

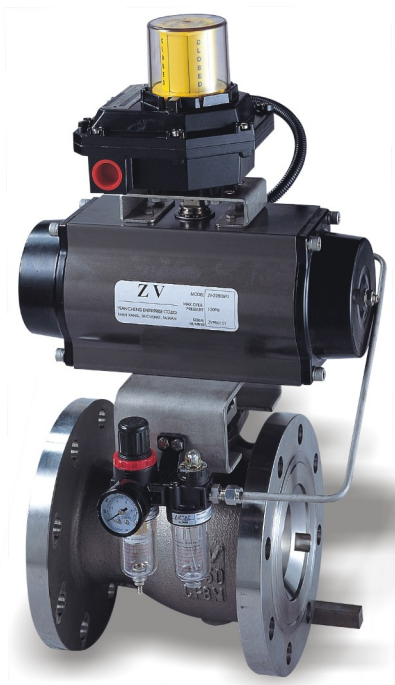

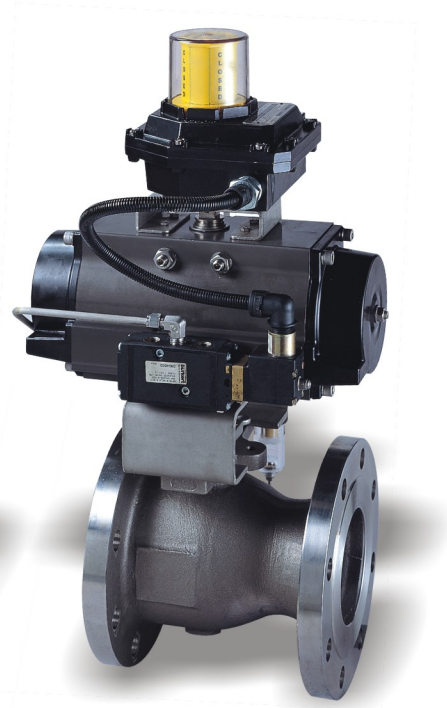

Bi-Directional Travel Stop Illustration

ZV series actuators feature bi-directional pinion travel stops. Side located stops allow a full ±5° of valve travel adjustment, giving a guaranteed range of adjustment between 80° and 100° of actuator travel. These travel stops are designed to absorb the maximun rated torque of the actuator and the maximum impact loads associated with recommended stroke speed.

Standard Assembly

Adjustment of the counterclockwise and clockwise rotation limits are accomplished by turning the respective left and right stop adjustment screws to reduce or increase output rotation.

Travel Adjustment Range

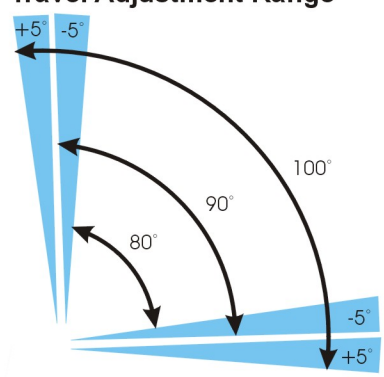

ZV CONTROL VALVE ASSEMBLED & EXPLODE DRAWING

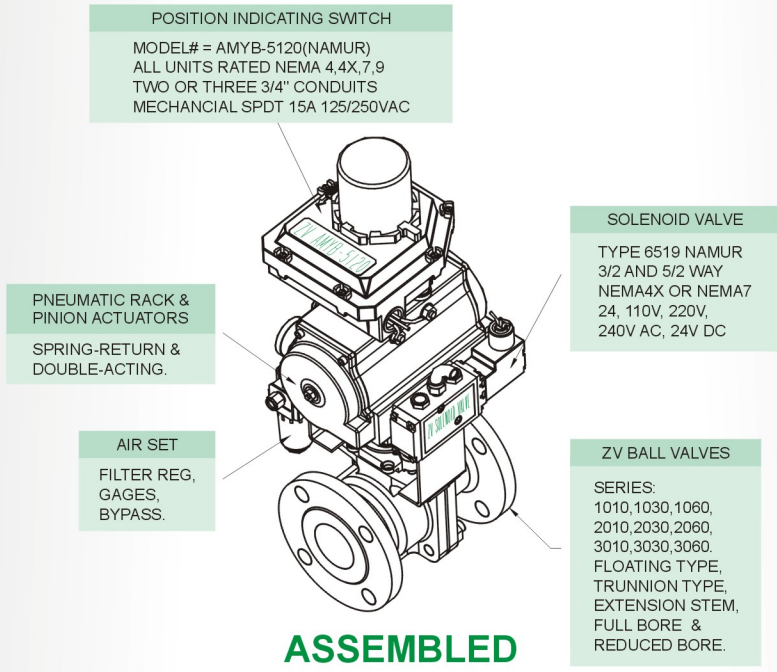

ASSEMBLED

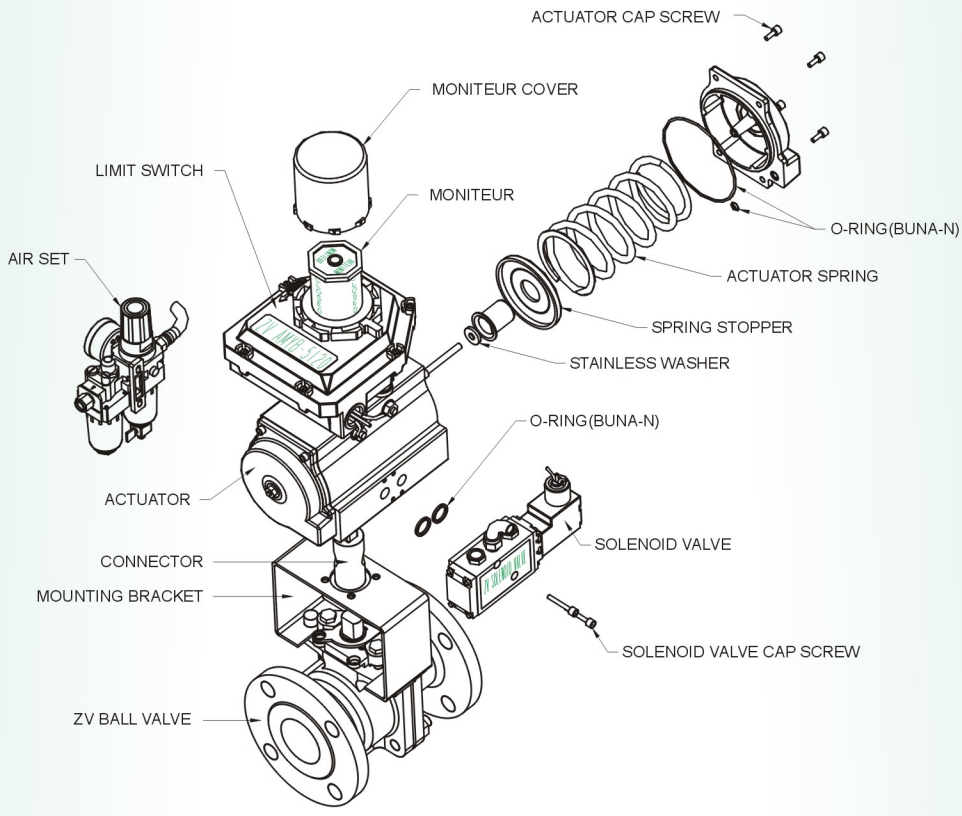

EXPLODE

The Electric Actuator

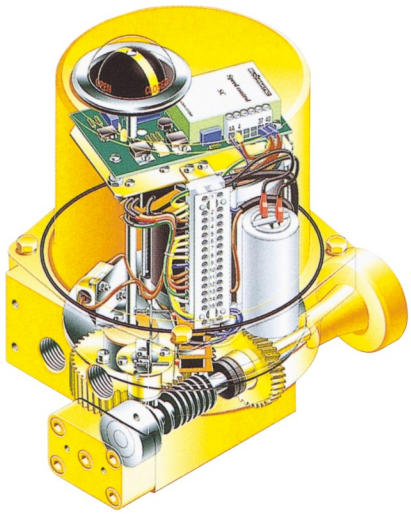

Specifications:

• Voltages	12,24,48 VDC/110,220,380,415,460 VAC
• Temperature	-20℃ to + 70℃
• Rotation	90°(±10°)
• Enclosure	IP 65 standard/IP 67 optional
• Explosion-Proof Model	EEx d IIB T4 to EN 50018
• Materials	Aluminium alloy, steel and bronze(cast iron)
• Coationg	Epoxy primer, two component polyurethane
• Economic Life	At least 50,000 operations
• Anti-Condensation Heater 10 watts	

Features:

- Compact model and low weight thanks to high-grade aluminium alloys used in the housing.
- 13 sizes, with torques from 18 to 2500 Nm
- Corrosion-resistant thanks to aluminium housing with polyurethane coating on the outside and stainless steel bolts.
- Mechanical end limit stops, end switch indicating open / close and anti-condensation heater are standard.
- Self locking with minimum backlash in the transmission.
- Visual position indication.
- Flange connections in accordance with ISO 5211 or DIN 3337 standrads.
- Standard manual override(except ELS type)
- Low/High temperature models and Spring return failsafe models are optional.

Dimensions

Model	A	B	E(pg)	M	O_1/P	V1/V2	W1/W2	O_2
ELS 18	130	107	13.5	11.2	7/11	42	M6	-
ELS 25	157	135	13.5	13	10/12	50/70	M6/M8	-
EL 20	160	196	13.5	-	11	50	M6	11
EL 35/55	190	255	13.5	-	14	50/70	M6/M8	14
EL 100	235	292	13.5	-	19	50/70	M6/M8	17
EL 150	235	292	13.5	-	19	50/70	M6/M8	17
EL 200	294	308	21	-	19	70/102	M8/M10	17
EL 350	294	308	21	-	19	70/102	M8/M10	17
EL 500	323	318	21	-	27	102*	M10	27
EL 800	323	356	21	-	27	125	M12	27
EL 1200	391	378	21	-	36	140	M16	36
EL 2500	540	485	21	-	46	165	M20	46
*Mounting flange EL 500 acc. DIN 3337; Pcd = 125								

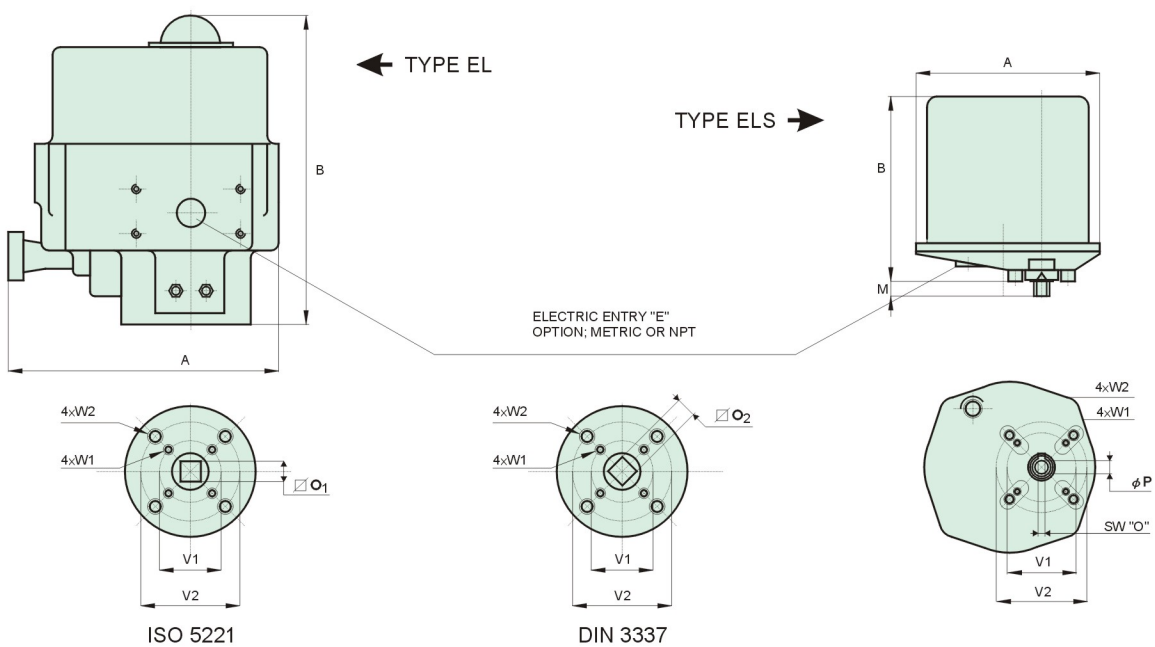

Technical Data

		ELS-18	ESL-25	EL-20	EL-35	EL-55	EL-100	EL-150	EL-200	EL-350	EL-500	EL-800	EL-1200	EL-2500
Torque(Nm)	break	18	25	20	35	55	100	150	200	350	500	800	1200	2500
	run	14	20	7	12	20	35	53	70	123	175	280	420	875
Torque(in.lb)	break	160	221	177	310	487	885	1.326	1.770	3.098	4.425	7.081	10.621	22.125
	run	124	177	62	108	177	310	465	620	1.084	1.548	2.478	3.717	7.744
Operating time(S)	50Hz	6.5	9.5	7	6	6	7	9	13.5	22	20	25.5	25.5	28
	60Hz	5.5	7.5	6	5	5	6	7.5	11.5	18	17	21.5	21.5	22.5
	DC	-	-	12	5	5	6.5	8	12	20	18	23	-	-
Current(A) 120/1/60	break	0.55	0.6	1.5	1.6	-	2.9	2.9	2.9	2.9	2.9	4.5	14	58
	run	0.45	0.5	0.8	1.1	-	2.1	2.1	2.1	2.1	2.1	2.8	5.8	8
220/1/50	break	0.1	0.3	0.7	-	0.6	1.7	1.7	1.7	1.7	1.7	2.3	7	27
	run	0.1	0.27	0.4	-	0.5	1.1	1.1	1.1	1.1	1.1	1.8	2.5	6
380/3/50	break	-	-	-	-	0.4	0.7	0.7	0.7	0.7	0.7	0.9	2.8	9
	run	-	-	-	-	0.2	0.4	0.4	0.4	0.4	0.4	0.54	0.6	1.5
460/3/60	break	-	-	-	-	0.37	0.63	0.63	0.63	0.63	0.63	0.87	1.1	2
	run	-	-	-	-	0.18	0.45	0.45	0.45	0.45	0.45	0.57	0.72	1.6
24Vdc	break	0.8	0.51	5	5	5	8	8	8	8	8	12	-	-
	run	0.15	0.1	0.65	1.7	1.7	2.8	2.8	3.7	3.7	3.7	5.8	-	-
24Vac	break	0.8	0.51	5	5	5	9	9	9	9	9	20	-	-
	run	0.15	0.1	1.1	1.7	1.7	4.8	4.8	6.3	6.3	6.3	10	-	-
Power consumption(W)	120/1/60	45	25	90	100	-	225	225	225	225	225	315	5.35	720
	220/1/50	40	65	80	-	72	200	200	200	200	200	305	450	792
	380/3/50	-	-	-	-	80	145	145	145	145	145	165	220	560
	460/3/60	-	-	-	-	77	180	180	180	180	180	200	266	600
	24Vdc	4.8	2.4	16	-	21	67	67	67	67	67	140	-	-
Power factor(cos.Phi)	120/1/60	-	-	1.02	0.84	-	0.98	0.98	0.98	0.98	0.98	0.93	0.83	0.74
	220/1/50	-	-	1.08	-	0.91	0.82	0.82	0.82	0.82	0.82	0.77	0.92	0.5
	380/3/50	-	-	-	-	0.54	0.51	0.51	0.51	0.51	0.51	0.47	0.55	0.67
	460/3/60	-	-	-	-	0.54	0.50	0.50	0.50	0.50	0.50	0.44	0.53	0.6
Motor speed	50Hz	1878	1620	2700	1200	1450	1450	1450	1450	1450	1450	1450	1450	1450
	60Hz	2328	2040	3300	1450	1725	1725	1725	1725	1725	1725	1725	1725	1725
	24Vdc/ac	-	-	1600	-	1600	1600	1600	1600	1600	1600	1500	-	-
Overall gear ratio		849/1	1070/1	1250/1	500/1	500/1	700/1	840/1	1316/1	2106/1	1159/1	2480/1	3100/1	2600/1
Capacitor(mf/U)	120/1/60	7/250	6/250	12/250	25/250	25/250	36/250	36/250	36/250	36/250	36/250	50/250	100/250	400/250
	220/1/50	1.5/400	2/400	5.5/450	-	8/450	16/250	25/450	20/250	20/250	20/250	16/450	25/450	100/450
Weight(kg)	W-proof	2.2	2.8	3	6	6	11	11	16.5	17	25.5	26	37	75
	Ex-proof	-	-	-	8	8	13	13	18.5	20	28.5	30	37	75
Weight(lbs)	W-proof	4.3	5.5	6.6	13	13	24	24	36	37.5	56	57	81.5	165
	Ex-proof	-	-	-	17.5	17.5	28.5	28.5	40.5	44	62.5	66	81.5	165

Type 6519 NAMUR
3/2 and 5/2 Way Solenoid valves with NAMUR Interface

Design and Function

The type 6519 NAMUR is a high quality servoassisted solenoid valve, in 3/2 and 5/2 way with NAMUR interface. Piloted by the Burkert 32 mm solenoid system for standard version or by the FM approved Class I Div. I or Class I Div. II solenoid system for explosion proof version.

The high flow rate valve is light in weight, corrosion resistant and has a long and reliable service life on lubricated and unlubricated air.

The valve comes with manual override and pressure indicator.

Symbols

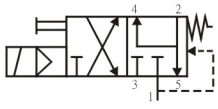

3/2 way valve with exhaust air feedback, when de-energized, outlet 2 exhausted

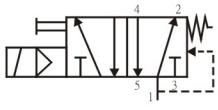

5/2 way valve, when de-energized, pressure port 1 connected to utlet 2, outlet 4 exhausted

Technical Data

Circuit function:	W-3/2 and 5/2 way Refer to symbols (Same valve for both function)
Material	
Body:	Polyamide
Threaded insert:	Nickel plated brass
Pilot base:	Brass
Seal:	NBR / Polyurethene
Orifice:	6mm
Pressure range:	2 to 8 bar
Flow(QNn):	900 1/mm
Media temperature:	-10 to +60℃
Response time:	Opening approx. 25 ms Closing approx. 40 ms (Times measured at outlet 2 or 4 from switching on until pressure rise to 90% pressure drop to 10% of a working pressure of 6 bar)
Operating voltages	
Standard version:	24, 110, 220, 240V AC, 24V DC
FM version:	24, 120, 240V AC, 24V DC
Voltage tolerance:	10%
Power consumption:	AC 21 VA (inrush) 12 VA/8W (hold), DC 8 W
Coil insulation class:	Class H.(STD.)
Duty cycle:	100% continuously rated
Electrical connection	
Standard version:	Cable plug for 7mm φ cable
FM version:	*Class I Div I*—moulded in 3× lead wires, length 450mm with 1/2" conduit hub *Class I Div II*—Cable plug with 1/2" conduit hub
Classification:	IP 65
Port connections	
Inlet and exhaust:	1/4"NPT
Outlet:	NAMUR interface
Installation:	As required (To convert 5/2 to 3/2 way blank off exhaust port 3 with the enclosed brass plug and turn NAMUR adaptor plate around for arrow mark to point at athe 3/2 symbol)

Dimensions
(in mm unless otherwise indicated)

Standard Version

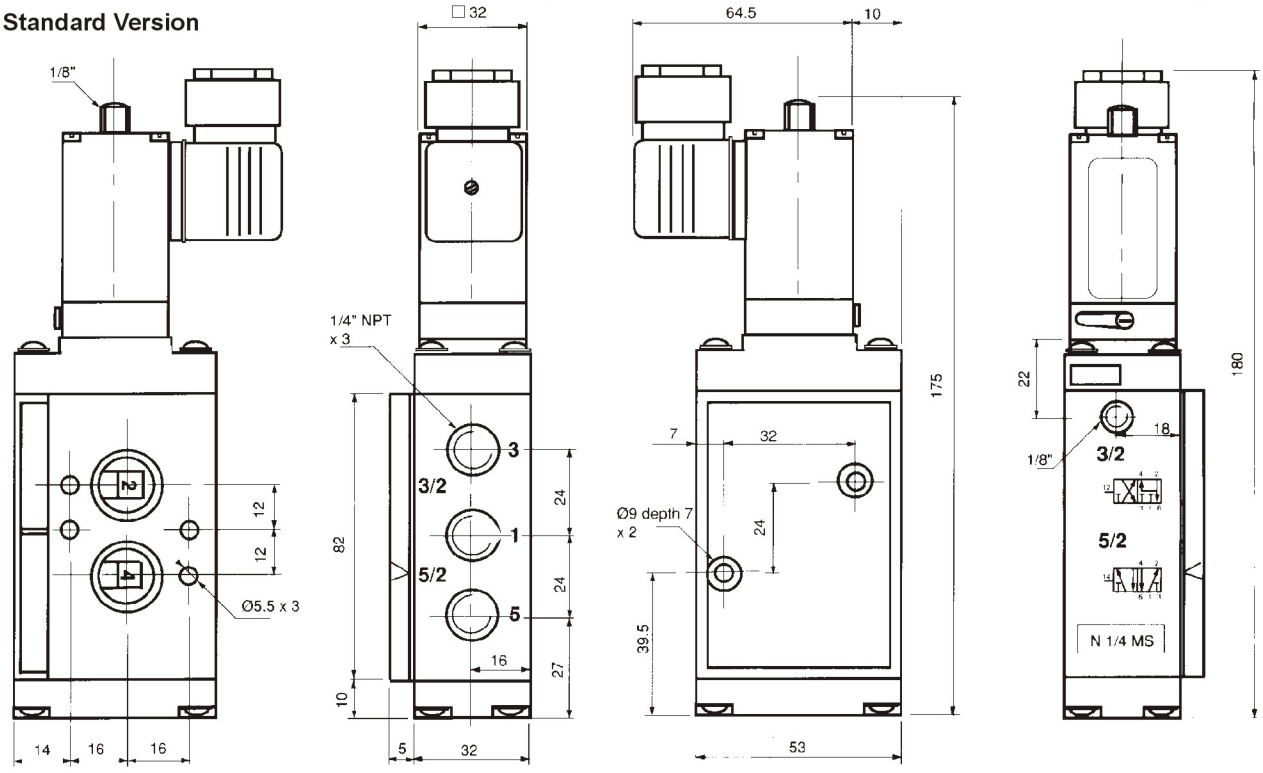

FM Class I Div II Version

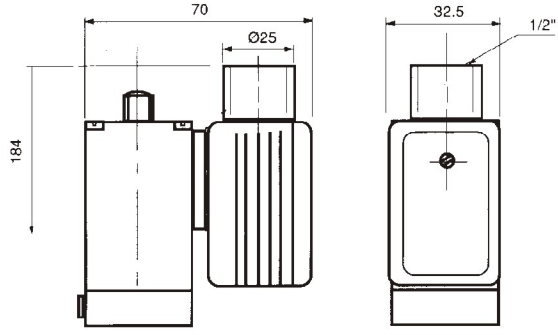

FM Class I Div I Version

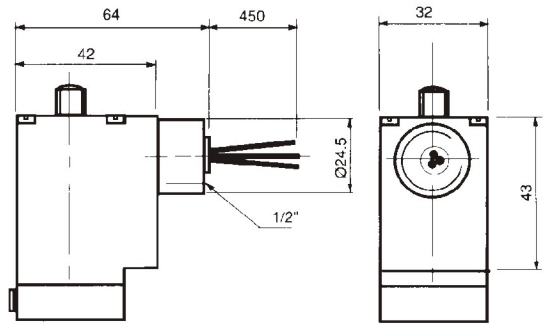

Ordering Chart

Circuit Function	Orifice DN (mm)	Flow Rate Air QNn (l/mm)	Port Connection	Pressure Range (bar)	Weight (kg)	Voltage	Version	Ordering No.
W	6.0	900	N1/4	2-8	0.50	24/=	Standard	SN04051
(3/2&						24/56		SN04052
5/2way)						110/56		SN04053
						220/56		SN04054
						240/56		SN04055
W	6.0	900	N1/4	2-8	0.51	24/=	FM Class I Div II	SN04056
(3/2&						24/56		SN04057
5/2way)						120/56		SN04058
						240/56		SN04059
	6.0	900	N1/4	2-8	0.55	24/=	FM Class I Div I	SN04060
W						24/56		SN04061
(3/2&						120/56		SN04062
5/2way)						240/56		SN04063

We reserve the right to make technical changes. In case of special application requirements please ask for advise.

Valve Position Indicating Switch

All Units Rated Nema 4, 4X, 7, 9

UL CSA Class 1 Group C & D,
Class 2 Group E, F, G, Divesion 1 & 2

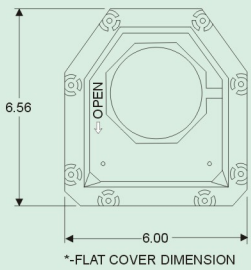

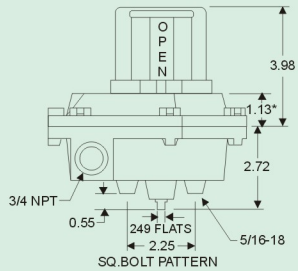

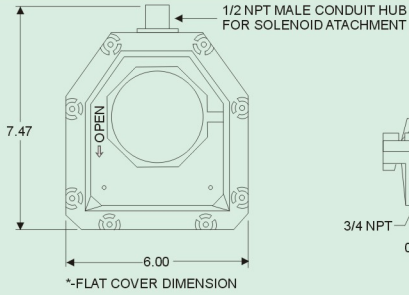

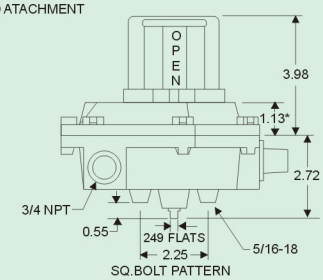

SPECIFICATIONS- Model # AMYB-1120
HOUSING.....Two 3/4" Conduits
SEALS.....Buna N
MONITEUR.....Yellow / Black
BEARING.....Bronze
SHAFT.....One Piece 303 SS
FASTENERS.....Stainless Steel
SWITCHES.....Mechanical SPDT 15A
OF SWITCHES.....Two
TERMINAL POINTS.....Eight

SPECIFICATIONS- Model # BMYB-1128
HOUSING.....2 @ 3/4" Conduits, 1 @ 1/2"Male Hub
SEALS.....Buna N
MONITEUR.....Yellow / Black
BEARING.....Bronze
SHAFT.....One Piece 303 SS
FASTENERS.....Stainless Steel
SWITCHES.....Mechanical SPDT 15A
OF SWITCHES.....Two
TERMINAL POINTS.....Eight

ORDERING INFORMATION

Use coding scheme below to generate required model number.

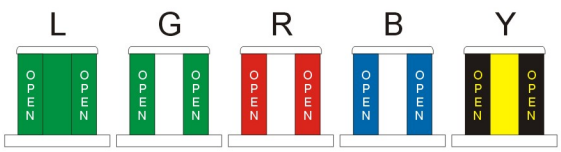

L=GREEN/RED
G=GREEN/WHITE
R=RED/WHITE
B=BLUE/WHITE
Y=YELLOW/BLACK

O=3 WAY PATH
T=3 WAY PATH
F=3 WAY PATH
S=4 WAY PATH
U=USER DEFINED
N=NONE (FLAT COVER)

MONITEUR TYPE

A=TWO CONDUITS
B=THREE CONDUITS
U=USER DEFINED
HOUSING STYLE

F=FLAT
M=MONITEUR
COVER STYLE

B=BRONZE
M=MONEL
S=STAINLESS STEEL
G=GRAPHITE
U=USER DEFINED
BEARING

MODEL # = **AMYB-1120**

SHAFT TYPE
1=ONE PIECE SHAFT
303 STAINLESS STEEL
2=SPLIT SHAFT
303 STAINLESS STEEL
3=ONE PIECE SHAFT
316 STAINLESS STEEL
4=SPLIT SHAFT
316 STAINLESS STEEL
5="NAMUR" ONE PIECE SHAFT
303 STAINLESS STEEL
6="NAMUR" SPLIT SHAFT
303 STAINLESS STEEL
7="NAMUR" ONE PIECE SHAFT
316 STAINLESS STEEL
8="NAMUR" SPLIT SHAFT
316 STAINLESS STEEL
9=USER DEFINED

SWITCH TYPE
0=NONE
1=MECHANICAL SPDT
15A 125/250VAC
2=NIMROD SENSOR SPDT
3A 110VAC - 2A 28VDC
3=PRISM CONTACTS SPDT
1A 110VAC / 48VDC
4=MECHANICAL DPDT
10A 125/250VAC
5=GO SWITCH SPDT
2A 240VAC - 50 MA 24VDC
8=P&F
NJ2-V3
T=NIMROD TTL
1A 24VDC

NO.OF SWITCHES
0=NONE
1=ONE
2=TWO
3=THREE
4=FOUR
5=FIVE
6=SIX

SOLENOID VALVE
0=NONE
1=ASCO*EF8320A182
2=ASCO*EF8342C1
3=ASCO*WPIS8314300
4=ASCO*WPIS8345301
5=3/4 FEMALE CONDUIT
6=1/2 FEMALE CONDUIT
7=3/4 MALE HUB
8=1/2 MALE HUB
9=USER DEFINED
S=USER SUPPLIED

OPTIONS- consult factory for options not listed here

Resistance Outputs.....0-150Ω, 0-1000Ω, 0-10000Ω
Mil Amp Outputs..... All standards, polarity independent
Seal Materials..... Viton
Station Addressable..... Bus Structure

*TRADEMARK OF AUTOMATIC SWITCH COMPANY, FLORHAM PARK, NJ